DRAFT

GEOTECHNICAL REPORT

Cornelius 8
North 4th Avenue and North Holladay Street
Cornelius, Oregon

Project No. T-8743

Terra Associates, Inc.

Prepared for:

AltaBird Investments
Tacoma, Washington

May 9, 2022

TERRA ASSOCIATES, Inc.
Consultants in Geotechnical Engineering, Geology
and
Environmental Earth Sciences

May 9, 2022
Project No. T-8743

DRAFT

Mr. Brendan Mason
AltaBird Investments
1411 North Cedar Street
Tacoma, Washington 98406

Subject: Geotechnical Report
Cornelius 8
North 4th Avenue and North Holladay Street
Cornelius, Oregon

Dear Mr. Mason:

As requested, we conducted a geotechnical engineering study for the subject project. The attached report presents our findings and recommendations for the geotechnical aspects of project design and construction.

Our field exploration indicates the site is generally underlain by approximately three to seven inches of organic topsoil overlying medium stiff to very stiff silts to the termination of the test pits. The exception to this general condition was observed in Test Pits TP-1, TP-5, and TP-7 where approximately two to six feet of fill soils composed of medium stiff to very stiff silts with varying gravel contents were observed. The deeper CPT data indicate the alluvial silts extended to the CPT termination depths. The silt deposits become interbedded with alluvial sands and silty sands below a depth of approximately 15 feet. In general, where cohesive silt and clay soils are indicated, correlated N_{60} values, indicate consistencies in the medium stiff to very stiff range. Where cohesionless sand and silty sand soils are indicated, correlated N_{60} values indicate relative densities typically in the medium dense to dense range. We did not observe any groundwater seepage in the excavations during our explorations although the results of a porewater dissipation test at CPT-2 indicate a static groundwater level of approximately eight feet below existing grades.

In our opinion, soil and groundwater conditions at the site will be suitable for support of the development as planned, provided recommendations contained herein are incorporated into project design and construction specifications.

12220 113th Avenue NE, Ste. 130, Kirkland, Washington 98034
Phone (425) 821-7777 • Fax (425) 821-4334

We trust the information presented in this report is sufficient for your current needs. If you have any questions or require additional information, please call.

Sincerely yours,
TERRA ASSOCIATES, INC.

Michael J. Xenos, E.I.T.
Staff Engineer

DRAFT

Carolyn S. Decker, P.E.
President

TABLE OF CONTENTS

Page No.

1.0 Project Description 1
2.0 Scope of Work 1
3.0 Site Conditions 2
3.1 Surface 2
3.2 Soils 2
3.3 Groundwater 3
3.4 Geologic Hazards 3
3.4.1 Erosion Hazard Areas 3
3.4.2 Landslide Hazard Areas 4
3.4.3 Seismic Hazard Areas 4
3.5 Seismic Site Class 4
4.0 Discussion and Recommendations 5
4.1 General 5
4.2 Site Preparation and Grading 6
4.3 Preload 7
4.4 Excavations 7
4.5 Foundations 8
4.6 Slab-on-Grade Floors 9
4.7 Stormwater Facilities 10
4.8 Infiltration Feasibility 11
4.9 Drainage 11
4.10 Utilities 12
4.11 Pavements 12
5.0 Additional Services 13
6.0 Limitations 13

Figures

Vicinity Map ..... Figure 1
Exploration Location Plan ..... Figure 2
Settlement Marker Detail ..... Figure 3
Typical Wall Drainage Detail ..... Figure 4

Appendix

Field Exploration and Laboratory Testing ..... Appendix A
Liquefaction Analysis Results ..... Appendix B

Geotechnical Report
Cornelius 8
North 4th Avenue and North Holladay Street
Cornelius, Oregon

1.0 PROJECT DESCRIPTION

The project consists of developing the site with an industrial building, along with associated stormwater improvements, access, parking, and utilities. Grading and development plans were not available at the time of this report. Based on existing site topography, we expect grading to be minimal with cuts and fills ranging from approximately one to five feet to achieve final pad and parking elevations across the site.

We anticipate the building will be constructed using precast reinforced concrete tilt-up perimeter wall panels with interior isolated columns supporting a steel or wood-truss roof system. We expect structural loads will be light, about 100 to 150 kips for isolated columns and 4 to 6 kips per foot for continuous perimeter bearing walls. Maximum product loading on the floors is not expected to exceed 350 pounds per square foot (psf).

The recommendations contained in the following sections of this report are based on the above design features. If actual features vary or changes are made, we should review them in order to modify our recommendations, as required. We should review the final design drawings and specifications to verify our recommendations have been properly interpreted and incorporated into project design and construction.

2.0 SCOPE OF WORK

Our work was completed in accordance with our authorized proposal dated February 25, 2022. Accordingly, on April 7, 2022, we explored subsurface conditions at the site at seven test pits excavated with a mini excavator to maximum depths of approximately ten feet below current site grades. On April 8, 2022, Oregon Geotechnical Explorations, under subcontract with Terra Associates, Inc., performed two cone penetration tests (CPT) to a maximum depth of about 100 feet below existing surface grades. Using the information obtained from this subsurface exploration, we performed analyses to develop geotechnical recommendations for development at the site.

Specifically, this report addresses the following:

- Soil and groundwater conditions.
- Geologic hazards per the City of Cornelius Municipal Code.
- Seismic design parameters per the current International Building Code (IBC).
- Site preparation and grading.
- Building preload/surcharge program.

- Excavations.
- Foundations.
- Slab-on-grade floors.
- Stormwater facilities.
- Infiltration feasibility.
- Drainage.
- Utilities.
- Pavements.

It should be noted that recommendations outlined in this report regarding drainage are associated with soil strength, design earth pressures, erosion, and stability. Design and performance issues with respect to moisture as it relates to the structure environment is beyond Terra Associates' purview. A building envelope specialist or contractor should be consulted to address these issues, as needed.

3.0 SITE CONDITIONS

3.1 Surface

The project site consists of two tax parcels totaling approximately 7.35 acres of land located northeast of the intersection of North 4th Avenue and North Holladay Street in Cornelius, Oregon. The approximate site location is shown on Figure 1.

The site is currently undeveloped and is used as an agricultural area. Vegetation at the site consists primarily of grass and weeds with a row of medium-sized trees along the northern perimeter of the site. Site topography is relatively flat with no obvious signs of sloping.

3.2 Soils

In general, the soils at the site generally consisted of approximately three to seven inches of topsoil overlying medium stiff to very stiff silts with varying sand contents to the termination of the test pits. The exception to this general condition was observed in Test Pits TP-1, TP-5, and TP-7 where approximately two to six feet of fill soils composed of medium stiff to very stiff silts with varying sand and gravel contents were observed.

The deeper CPT data indicate the alluvial silts extended to the CPT termination depths. The silt deposits become interbedded with alluvial sands and silty sands below a depth of approximately 15 feet. In general, where cohesive silt and clay soils are indicated, correlated N_{60} values, indicate consistencies in the medium stiff to very stiff range. Where cohesionless sand and silty sand soils are indicated, correlated N_{60} values indicate relative densities typically in the medium dense to dense range.

The *Engineering Geology of the Tualatin Valley Region* by H.G. Schliker and R.J. Deacon (1967) shows site soils mapped as Willamette Silt (Qws). The native soils observed onsite are consistent with this mapped description.

The United States Department of Agriculture Natural Resources Conservation Service (NRCS) classifies the onsite soils as Quatama loam, Woodburn silt loam, and Verboort silty clay loam. A soil horizon consisting of this material is typically deposited along flood plains in the form of terraces and is derived from alluvial processes which is consistent with our exploratory findings and knowledge of the area's geologic setting.

The preceding discussion is intended to be a brief review of the soil conditions observed at the site. More detailed descriptions are presented on the Test Pit Logs attached in Appendix A. The approximate locations of the test pits are shown on attached Figure 2.

3.3 Groundwater

We did not observe any groundwater seepage during our explorations. Soil mottling was noted within the native silts in every test pit indicating perched seasonal groundwater develops within these soils. The occurrence of shallow perched groundwater is typical for sites underlain by fine-grained soils. A pore water pressure dissipation test completed at the location of CPT-2 indicates the static groundwater level to be approximately eight feet below current site grades. Groundwater observations were made during the winter, so groundwater is expected to be near seasonal high levels. We expect groundwater levels and flow rates will fluctuate seasonally and will typically reach their highest levels during and shortly following the wet winter months (November through May).

3.4 Geologic Hazards

The City of Cornelius nor Washington County do not explicitly define geologic hazards. However, we have evaluated the site for the presence of erosion, landslide, and seismic hazards in the sections below.

3.4.1 Erosion Hazard Areas

The majority of the soils observed on the site are classified as Quatama loam, 3 to 7 percent slopes, Woodburn silt loam, 0 to 3 percent slopes, and Verboort silty clay loam, 0 to 3 percent slopes by the United States Department of Agriculture Natural Resources Conservation Service (NRCS). Over the site with existing slope gradients, these soils, with slopes ranging from 0 to 8 percent, will have a slight to moderate potential for erosion when exposed. The soils in the northern portion of the site which are mapped as Quatama loam, 7 to 12 percent slopes, will have a severe potential for erosion when exposed. However, site topography is relatively flat with no slopes approaching a seven percent grade. Therefore, it is our opinion that the site does not contain an erosion hazard.

Regardless, the site soils would be susceptible to some erosion when exposed during construction. In our opinion, proper implementation, and maintenance of Best Management Practices (BMPs) for erosion prevention and sediment control would adequately mitigate the erosion potential in the planned development area. Erosion protection measures as required by the City of Cornelius will need to be in place prior to and during grading activities at the site.

3.4.2 Landslide Hazard Areas

The topography at the site is relatively flat with no obvious signs of sloping. Additionally, the site is not mapped as a landslide hazard area as shown on the Oregon Department of Geology and Mineral Industries (DOGAMI) HazVu map. Therefore, it is our opinion that a landslide hazard does not exist at the site.

3.4.3 Seismic Hazard Areas

Liquefaction is a phenomenon where there is a reduction or complete loss of soil strength due to an increase in water pressure induced by vibrations. Liquefaction mainly affects geologically recent deposits of fine-grained sands underlying the groundwater table. Soils of this nature derive their strength from intergranular friction. The generated water pressure or pore pressure essentially separates the soil grains and eliminates this intergranular friction; thus, eliminating the soil's strength.

We completed a liquefaction analysis using the computer program LiquefyPro published by CivilTech Corporation. The analysis was completed using a ground acceleration value of 0.42g, which is the ground acceleration for the maximum considered earthquake (MCE) for an earthquake with a 2,500 return-period. The value was determined using the U.S. Geological Survey (USGS) web-based Unified Hazard Tool.

The results of our analysis indicate soil liquefaction could occur during the design earthquake event, resulting in total settlements approaching approximately three-and-one-half inches, with one-half of that settlement likely being differential in nature. Results of the analysis are attached in Appendix B.

In our opinion, this amount of settlement would not structurally impair the building. However, cosmetic damage to the structure in the form of misaligned doors and windows, cracking, and floor settlement could occur. Some utility connections may also be impacted. If the owner is not willing to accept the risk of building damage requiring repair should liquefaction-induced settlements occur, then foundations should be supported on ground improved using stone columns designed to mitigate soil liquefaction settlements below the building foundations.

3.5 Seismic Site Class

As discussed in the previous section, soil conditions at the site will be subject to the soil liquefaction phenomenon during a severe seismic event. Because of this condition, per the current International Building Code (IBC), subsurface conditions would be assigned site class "F" which would require performing a site-specific seismic analysis to determine seismic forces for structural design. However, the IBC allows for using code derived seismic values for the soil conditions indicated if the building's fundamental period is equal to or less than 0.5 seconds. If the proposed building falls into this category, based on soil conditions encountered and our knowledge of the area geology, site class "D" can be used to determine seismic design forces.

4.0 DISCUSSION AND RECOMMENDATIONS

4.1 General

Based on our study, development of the site as proposed is feasible from a geotechnical engineering standpoint. The primary geotechnical concern at the site is the presence of soil strata susceptible to consolidation under the planned building loads. The upper approximately 15 feet of silt observed in the test pits and CPTs is compressible and, if not mitigated, it will likely cause unacceptable levels of differential building settlement under expected building loads.

Given the depth to the compressible silt layers, in our opinion, the potential post-construction building settlements can be mitigated by implementing a preload program. Preloading will involve placing the structural fill required to achieve the finish floor elevation and allowing settlements to occur under this load before building construction is initiated. We expect that these settlements would occur in about three to five weeks following full application of the building fill.

After completing the preload, building construction can begin. The buildings can be supported on conventional spread footings bearing on a minimum of two feet of compacted structural fill. Overexcavation of native soils and replacement with structural fill will likely be required where deeper footing depths are required, such as below the perimeter foundations adjacent to the loading dock areas or where perimeter footings are deepened for seismic resistance. In our opinion, mitigation of the weak subgrade soils in paved areas will require cement amending or excavation and replacement with imported gravel base material.

If building schedules do not allow for a preload program to take place, the buildings can be supported on ground improved by installing vibrated stone columns. If completed over the entire building footprints, this would preclude the need for a fill preload program. If stone columns are only used to improve ground conditions below building footings, preloading to mitigate potential floor slab settlement is recommended.

The native and existing fill soils encountered at the site generally contain a sufficient percentage of fines that will make it difficult to compact as structural fill when too wet. The ability to use these soils from site excavations as structural fill will depend on the soil moisture content and the prevailing weather conditions at the time of construction. If grading activities will take place during winter, the owner should be prepared to import clean granular material for use as structural fill and backfill. Alternatively, stabilizing the moisture in the native and existing fill soils with cement or lime can be considered.

Detailed recommendations regarding these issues and other geotechnical design considerations are provided in the following sections of this report. These recommendations should be incorporated into the final design drawings and construction specifications.

4.2 Site Preparation and Grading

To prepare the site for construction, all vegetation, organic surface soils, and other deleterious material should be stripped and removed from the site. Surface stripping depths ranging from three to seven inches should be expected to remove the organic surface soils and vegetation. Organic topsoil will not be suitable for use as structural fill but may be used for limited depths in nonstructural areas.

Once clearing and stripping operations are complete, cut and fill operations can be initiated to establish desired building grades. Prior to placing fill, all exposed bearing surfaces should be observed by a representative of Terra Associates, Inc. to verify soil conditions are as expected and suitable for support of new fill or building elements. Our representative may request a proofroll using heavy rubber-tired equipment to determine if any isolated soft and yielding areas are present. If excessively yielding areas are observed, and they cannot be stabilized in place by compaction, the affected soils should be excavated and removed to firm bearing and grade restored with new structural fill. If the depth of excavation to remove unstable soils is excessive, the use of geotextile fabrics, such as Mirafi 500X, or an equivalent fabric, can be used in conjunction with clean granular structural fill. Our experience has shown that, in general, a minimum of 18 inches of a clean, granular structural fill place and compacted over the geotextile fabric should establish a stable bearing surface.

All building footings should obtain support on a minimum of two feet of granular structural fill. The fill should extend laterally from the edge of footing a minimum distance of one foot.

If building subgrades constructed using native soils, existing fill soils, or weather sensitive import fill will be exposed during wet weather, it would be advisable to place 12 inches of wet-weather granular structural fill on the building pads to prevent deterioration of the floor subgrade. Alternatively, the upper 12 inches of the floor subgrade could be stabilized by cement amending.

Our study indicates the native silt soils and existing fill soils contain a sufficient percentage of fines (silt- and clay-sized particles) that will make them difficult to compact as structural fill if they are too wet or too dry. Accordingly, the ability to use these native and possible fill soils from site excavations as structural fill will depend on their moisture content and the prevailing weather conditions when site grading activities take place. We recommend achieving compaction of the native silt soils and existing silt fill soils using a sheep's foot roller on lifts no greater than six inches in thickness conforming to the standards outlined below Soils that are too wet to properly compact could be dried by aeration during dry weather conditions or mixed with an additive such as cement or lime to stabilize the soil and facilitate compaction. If an additive is used, then additional Best Management Practices (BMPs) for its use will need to be incorporated into the Temporary Erosion and Sedimentation Control plan (TESC) for the project.

For this purpose, we recommend importing a granular soil that meets the following grading requirements:

U.S. Sieve Size	Percent Passing
6 inches	100
No. 4	75 maximum
No. 200	5 maximum*

*Based on the 3/4-inch fraction.

Prior to use, Terra Associates, Inc. should examine and test all materials imported to the site for use as structural fill.

Structural fill should be placed in uniform loose layers not exceeding 12 inches and compacted to a minimum of 95 percent of the soil's maximum dry density, as determined by American Society for Testing and Materials (ASTM) Test Designation D-698 (Standard Proctor). The moisture content of the soil at the time of compaction should be within two percent of its optimum, as determined by this ASTM standard. In nonstructural areas, the degree of compaction can be reduced to 90 percent. For the native silt soils and existing fill soils, the layer thickness should be reduced to six inches.

4.3 Preload

We recommend preloading the building areas to limit building and floor slab settlements to tolerable levels. For this procedure, we recommend placing structural fill in the building areas to the design floor elevation and delaying building construction until settlement under this fill load has occurred. The preload fill should extend a minimum of five feet beyond the building perimeter. A minimum of four feet of fill should be placed. If this fill depth exceeds that required to achieve design floor grade, the surplus depth would be treated as a surcharge and removed following completion of settlement as indicated by survey readings at settlement markers as discussed below.

Total settlement under the building fill is estimated in the range of two to four inches. These settlements are expected to occur in about three to five weeks following full application of the building fill.

To verify the amount of settlement and the time rate of movement, the preload program should be monitored by installing settlement markers. The settlement markers should be installed on the existing grade prior to placing any building or preload fills. Once installed, elevations of both the fill height and marker should be taken twice weekly until the full height of the surcharge is in place. Once fully preloaded, readings should continue weekly until the anticipated settlements have occurred. A typical settlement marker detail is provided as Figure 3.

It is critical that the grading contractor recognize the importance of the settlement marker installations. All efforts must be made to protect the markers from damage during fill placement. It is difficult, if not impossible, to evaluate the progress of the surcharge program if the markers are damaged or destroyed by construction equipment. As a result, it may be necessary to install new markers and extend the surcharging time period in order to ensure that settlements have ceased and building construction can begin.

Following the successful completion of the preload program, with foundations supported on a minimum of two feet of granular structural fill and dimensioned as recommended in Section 4.5 of this report, estimated maximum total and differential post-construction settlement are about one inch and one-half inch, respectively.

4.4 Excavations

All excavations at the site associated with confined spaces, such as those for utility construction, must be completed in accordance with local, state, or federal requirements. Based on current rules outlined in Oregon OSHA, Division 3, Subdivision P - Excavations, the site's native silt soils would be classified as Type B soils. The site's existing fill soils and deeper native sand soils would be classified as Type C soils.

Accordingly, temporary excavations in Type C soils should have their slopes laid back at an inclination of 1.5:1 (Horizontal:Vertical) or flatter, from the toe to the crest of the slope. Temporary excavations in Type B soils should have their slopes laid back at an inclination of 1:1 or flatter. If there is insufficient space to complete the excavations in this manner, or if excavations greater than 20 feet in depth are planned, then temporary shoring to support the excavations may be required. Properly designed and installed shoring trench boxes can be used to support utility trench excavations where required.

All exposed temporary slope faces that will remain open for an extended period of time should be covered with a durable reinforced plastic membrane during construction to prevent slope raveling and rutting during periods of precipitation.

While no groundwater seepage was observed within the test pits during our explorations, the results of the pore water dissipation test at CPT-2 indicate groundwater will likely be encountered in excavation extending below approximately eight feet below current grades. During the normally wet winter months shallower groundwater should be expected. Excavations extending below this depth may encounter groundwater with volumes and flow rates sufficient to require some level of dewatering. Shallow excavations that do not extend more than one to two feet below the groundwater table can likely be dewatered by conventional sump-pumping procedures along with a system of collection trenches. Deeper excavations will require dewatering by well points or isolated deep-pump wells. The utility subcontractor should be prepared to implement excavation dewatering by well point or deep-pump wells, as needed. This will be an especially critical consideration for any deep excavations such for lift stations and sanitary sewer tie-ins.

This information is provided solely for the benefit of the owner and other design consultants and should not be construed to imply that Terra Associates, Inc. assumes responsibility for job site safety. It is understood that job site safety is the sole responsibility of the project contractor.

4.5 Foundations

Following the completion of the preload program, the buildings may be supported on conventional spread footing foundations bearing on subgrade prepared as recommended in Section 4.2 of this report. Perimeter foundations exposed to the weather should bear at a minimum depth of 1.5 feet below final exterior grades for frost protection. Interior foundations can be constructed at any convenient depth below the floor slab.

All building footings should obtain support on two feet of compacted granular structural fill. The fill should extend laterally from the edge of footing a minimum distance of one foot.

We recommend designing foundations bearing on two feet of structural fill for a net allowable bearing capacity of 2,500 psf. For short-term loads, such as wind and seismic, a one-third increase in this allowable capacity can be used. Following successful completion of the surcharge program, with structural loading as anticipated and this bearing stress applied, estimated total foundation settlements of about one-inch and differential settlement of ½-inch should be expected.

For designing foundations to resist lateral loads, a base friction coefficient of 0.35 can be used. Passive earth pressures acting on the sides of the footings can also be considered. We recommend calculating this lateral resistance using an equivalent fluid weight of 300 pounds per cubic foot (pcf). We recommend not including the upper 12 inches of soil in this computation because it can be affected by weather or disturbed by future grading activity. This value assumes the foundations will be backfilled with structural fill as described in Section 4.2 of this report. The values recommended include a safety factor of 1.5.

Due to the potential for soil liquefaction under seismic loading, the current IBC requires spread footings to be tied together to enable the footings to bridge over areas of local settlement and provide an increased resistance against soil movement.

Ground Improvement

As noted earlier if the site scheduled does not allow for the preload program, the buildings can be supported on ground improved using vibrated stone columns. This method creates highly densified columns of graded aggregate that would extend through the upper medium stiff to very stiff silts into the underlying medium dense to dense sands. Due to the methods used to construct the columns, some improvement of the adjacent soils is also realized.

Moreover, these methods can provide liquefaction mitigation by providing drainage paths and reduced pore pressures during ground shaking, and by constructing stiff, non-liquefiable inclusions in the soils. Once constructed, conventional spread footing foundations can be designed to bear immediately above the stone columns.

These ground improvement techniques are typically completed on a design/build approach with both design and construction completed by a geotechnical specialty contractor. We can assist in contacting and selecting the specialty contractor, if desired.

4.6 Slab-on-Grade Floors

Slab-on-grade floors may be supported on subgrade prepared as recommended in Section 4.2 of this report. Immediately below the floor slabs, we recommend placing a four-inch-thick capillary break layer of clean, free-draining, coarse sand or fine gravel that has less than five percent passing the No. 200 sieve. This material will reduce the potential for upward capillary movement of water through the underlying soil and subsequent wetting of the floor slabs.

The capillary break layer will not prevent moisture intrusion through the slab caused by water vapor transmission. Where moisture by vapor transmission is undesirable, such as covered floor areas, a common practice is to place a durable plastic membrane on the capillary break layer, then cover the membrane with a layer of clean sand or fine gravel to protect it from damage during construction and aid in uniform curing of the concrete slab. It should be noted, if the sand or gravel layer overlying the membrane is saturated prior to pouring the slab, it will be ineffective in assisting in uniform curing of the slab and can actually serve as a water supply for moisture transmission through the slab and affecting floor coverings. Therefore, in our opinion, covering the membrane with a layer of sand or gravel should be avoided if floor slab construction occurs during the wet winter months and the layer cannot be effectively drained. We recommend floor designers and contractors refer to the current American Concrete Institute (ACI) Manual of Concrete Practice for further information regarding vapor barrier installation below slab-on-grade floors.

With the subgrade prepared as recommended, design of the floor slab for storage rack loading and lift truck vehicle traffic, a subgrade modulus of 120 pounds per square inch per inch of deflection (pci) can be used.

4.7 Stormwater Facilities

Site stormwater plans were not available at the time of this report.

Detention Vault

We expect the bottom of the excavations for the detention vaults will expose very stiff silts. Vault foundations supported by these native soils may be designed for an allowable bearing capacity of 3,000 psf. For short-term loads, such as seismic, a one-third increase in this allowable capacity can be used.

Vault walls should be designed as below-grade retaining walls. The magnitude of earth pressure development on engineered retaining walls will partly depend on the quality of the wall backfill. We recommend placing and compacting wall backfill as structural fill as described in Section 4.2 of this report. To prevent overstressing the walls during backfilling, heavy construction machinery should not be operated within five feet of the wall. Wall backfill in this zone should be compacted with hand-operated equipment. To prevent hydrostatic pressure development, wall drainage must also be installed. A typical wall drainage detail is shown on Figure 4.

With wall backfill placed and compacted as recommended and drainage properly installed, we recommend designing unrestrained walls for an active earth pressure equivalent to a fluid weighing 35 pounds per cubic foot (pcf). For restrained walls, an additional uniform load of 100 pounds per square foot (psf) should be added to the 35 pcf. To account for typical traffic surcharge loading, the walls can be designed for an additional imaginary height of two feet (two-foot soil surcharge). For evaluation of below-grade walls under seismic loading, an additional uniform lateral pressure equivalent to 8H psf, where H is the height of the below-grade portion of the wall in feet, can be used. These values assume a horizontal backfill condition and that no other surcharge loading such as traffic, sloping embankments, or adjacent buildings will act on the wall. If such conditions will exist, then the imposed loading must be included in the wall design. Friction at the base of foundations and passive earth pressure will provide resistance to these lateral loads. Values for these parameters are given in Section 4.5 of this report.

If it is not possible to discharge collected water at the footing invert elevation, the invert elevation of the wall drainpipe could be set equivalent to the outfall invert. For any portion of the wall that falls below the invert elevation of the wall drain, an earth pressure equivalent to a fluid weighing 85 pcf should be used.

Stormwater Ponds

If fill berms will be constructed, the berm locations should be stripped of topsoil, duff, and soils containing organic material prior to the placement of fill. The fill berms should be constructed by placing structural fill in accordance with recommendations outlined in Section 4.2 of this report. Material used to construct pond berms should consist of predominately granular soils with a maximum size of three inches and a minimum of 20 percent fines. Terra Associates, Inc. should examine and test all onsite or imported materials proposed for use as berm fill prior to their use.

Due to the exposure to fluctuating stored water levels and wave action, soils exposed on the interior side slopes of the ponds may be subject to some risk of periodic shallow instability or sloughing. Establishing interior slopes at a 3:1 gradient will significantly reduce or eliminate this potential. Exterior berm slopes and interior slopes above the maximum water surface should be graded to a finished inclination no steeper than 2:1. Finished slope faces should be thoroughly compacted and vegetated to guard against erosion.

We should review the stormwater plans when they are completed and revise our recommendations, if required.

4.8 Infiltration Feasibility

Based on our study, subsurface conditions are not suitable for infiltration of site stormwater. The native silt soils and lower interbedded silt and silty sand soils observed at the site contain a high percentage of soil fines that would impede any downward migration of site stormwater. These soil conditions would preclude using infiltration systems to manage development stormwater. Even low impact development (LID) techniques would likely overtop during rain events and cause minor local flooding.

4.9 Drainage

Surface

Final exterior grades should promote free and positive drainage away from the site at all times. Water must not be allowed to pond or collect adjacent to foundations or within the immediate building areas. We recommend providing a positive drainage gradient away from the building perimeters. If this gradient cannot be provided, surface water should be collected adjacent to the structures and disposed to appropriate storm facilities.

Subsurface

In our opinion, with floor slabs at or elevated above the adjacent exterior grade, and positive drainage away from the structure maintained, installation of conventional perimeter foundation drains would not be necessary for the industrial grade building.

If positive drainage away from the building perimeters is not provided, or where landscaping is completed adjacent to the buildings, we recommend installing a continuous drain along the outside lower edge of the perimeter building foundations. The drains can be laid to grade at an invert elevation equivalent to the bottom of footing grade. The drains can consist of four-inch diameter perforated PVC pipe that is enveloped in washed half- to three-quarter-inch gravel-sized drainage aggregate. The aggregate should extend six inches above and to the sides of the pipe. The foundation drains and roof downspouts should be tightlined separately to an approved point of controlled discharge. All drains should be provided with cleanouts at easily accessible locations and should be serviced at least once each year.

4.10 Utilities

Utility pipes should be bedded and backfilled in accordance with American Public Works Association (APWA) or local jurisdictional specifications. At minimum, trench backfill should be placed and compacted as structural fill as described in Section 4.2 of this report. As noted, the native and existing fill soils are moisture sensitive and close moisture control will be required to facilitate proper compaction. If utility construction takes place during the wet winter months, it will likely be necessary to import suitable wet-weather fill for utility trench backfilling.

The utility contractor should also be prepared for encountering unstable soils below the pipe invert elevations. If not removed from below the pipe and replaced with crushed rock or additional bedding material, pipe deflections may occur as a result of the soil yielding and compressing in response to loading imposed during trench backfilling. The need to overexcavate and stabilize the pipe foundation before backfilling should be evaluated by observation and testing during construction. We recommend utilizing pipe connections that can accommodate the anticipated settlements discussed above.

4.11 Pavements

Pavement subgrades should be prepared as described in Section 4.2 of this report. Regardless of the degree of relative compaction achieved, the subgrade must be firm and relatively unyielding before paving. The subgrade should be proofrolled with heavy rubber-tired construction equipment such as a loaded ten-yard dump truck to verify this condition.

The pavement design section is dependent upon the supporting capability of the subgrade soils and the traffic conditions to which it will be subjected. We expect traffic will consist of cars and light trucks, along with heavy traffic in the form of tractor-trailer rigs. For design considerations, we have assumed traffic in parking and in car/light truck access pavement areas can be represented by an 18-kip Equivalent Single Axle Loading (ESAL) of 50,000 over a 20-year design life. For heavy traffic pavement areas, we have assumed an ESAL of 300,000 would be representative of the expected loading. These ESALs represent loading approximately equivalent to 3 and 18, loaded (80,000-pound GVW) tractor-trailer rigs traversing the pavement daily in each area, respectively.

With a stable subgrade prepared as recommended, we recommend the following options for pavement sections:

Light Traffic and Parking:

- Two inches of hot mix asphalt (HMA) over six inches of crushed rock base (CRB)
- Full depth HMA – 4 inches

Heavy Traffic:

- Three inches of HMA over eight inches of CRB
- Full depth HMA – five inches

For exterior Portland cement concrete (PCC) pavement, we recommend the following:

- Six inches of PCC over two inches of CRB
    - 28-day compressive strength – 4,000 psi
    - Control joints spaced at a maximum of 15 feet

The paving materials used should conform to the Washington State Department of Transportation (WSDOT) specifications for half-inch class HMA, PCC, and CRB.

Long-term pavement performance will depend on surface drainage. A poorly drained pavement section will be subject to premature failure resulting from surface water infiltrating the subgrade soils and reducing their supporting capability. For optimum performance, we recommend surface drainage gradients of at least two percent. Some degree of longitudinal and transverse cracking of the pavement surface should be expected over time. Regular maintenance should be planned to seal cracks as they occur.

5.0 ADDITIONAL SERVICES

Terra Associates, Inc. should review the final designs and specifications in order to verify that earthwork and foundation recommendations have been properly interpreted and implemented in project design. We should also provide geotechnical services during construction in order to observe compliance with our design concepts, specifications, and recommendations. This will allow for design changes if subsurface conditions differ from those anticipated prior to the start of construction.

6.0 LIMITATIONS

We prepared this report in accordance with generally accepted geotechnical engineering practices. This report is the copyrighted property of Terra Associates, Inc. and is intended for specific application to the Cornelius 8 project in Cornelius, Oregon. This report is for the exclusive use of AltaBird Investments and their authorized representatives. No other warranty, expressed or implied, is made.

The analyses and recommendations presented in this report are based on data obtained from our subsurface explorations. Variations in soil conditions can occur, the nature and extent of which may not become evident until construction. If variations appear evident, Terra Associates, Inc. should be requested to reevaluate the recommendations in this report prior to proceeding with construction.

REFERENCE: https://www.bing.com/maps ACCESSED 4/14/22

Terra Associates, Inc.
Consultants in Geotechnical Engineering
Geology and
Environmental Earth Sciences

VICINITY MAP
CORNELIUS 8
CORNELIUS, OREGON

Proj.No. T-8743	Date: MAY 2022	Figure 1

NOTE:

THIS SITE PLAN IS SCHEMATIC. ALL LOCATIONS AND DIMENSIONS ARE APPROXIMATE. IT IS INTENDED FOR REFERENCE ONLY AND SHOULD NOT BE USED FOR DESIGN OR CONSTRUCTION PURPOSES.

REFERENCE: SITE PLAN PROVIDED BY BING MAPS.

LEGEND:

APPROXIMATE TEST PIT LOCATION

APPROXIMATE CONE PENETRATION TEST LOCATION

0 80 160

APPROXIMATE SCALE IN FEET

N

Terra Associates, Inc.
Consultants in Geotechnical Engineering
Geology and
Environmental Earth Sciences

EXPLORATION LOCATION PLAN
CORNELIUS 8
CORNELIUS, OREGON

Proj.No. T-8743	Date: MAY 2022	Figure 2

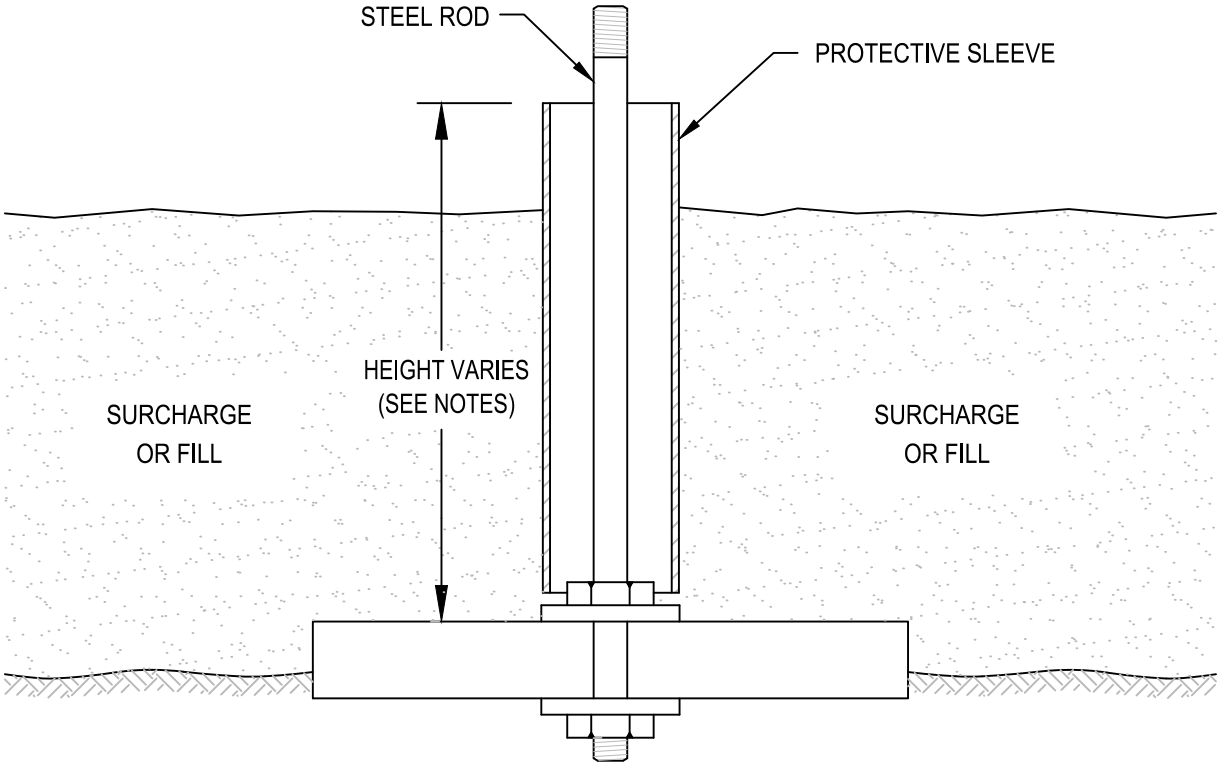

NOT TO SCALE

NOTES:

1. BASE CONSISTS OF 3/4" THICK, 2'x2' PLYWOOD WITH CENTER DRILLED 5/8" DIAMETER HOLE.
2. BEDDING MATERIAL, IF REQUIRED, SHOULD CONSIST OF CLEAN COARSE SAND.
3. MARKER ROD IS 1/2" DIAMETER STEEL ROD THREADED AT BOTH ENDS.
4. MARKER ROD IS ATTACHED TO BASE BY NUT AND WASHER ON EACH SIDE OF BASE.
5. PROTECTIVE SLEEVE SURROUNDING MARKER ROD SHOULD CONSIST OF 2" DIAMETER PLASTIC TUBING. SLEEVE IS NOT ATTACHED TO ROD OR BASE.
6. ADDITIONAL SECTIONS OF STEEL ROD CAN BE CONNECTED WITH THREADED COUPLINGS.
7. ADDITIONAL SECTIONS OF PLASTIC PROTECTIVE SLEEVE CAN BE CONNECTED WITH PRESS-FIT PLASTIC COUPLINGS.
8. STEEL MARKER ROD SHOULD EXTEND AT LEAST 6" ABOVE TOP OF PLASTIC PROTECTIVE SLEEVE.
9. PLASTIC PROTECTIVE SLEEVE SHOULD EXTEND AT LEAST 1" ABOVE TOP OF FILL SURFACE.

Terra Associates, Inc.
Consultants in Geotechnical Engineering
Geology and
Environmental Earth Sciences

SETTLEMENT MARKER DETAIL
CORNELIUS 8
CORNELIUS, OREGON

Proj.No. T-8743	Date: MAY 2022	Figure 3

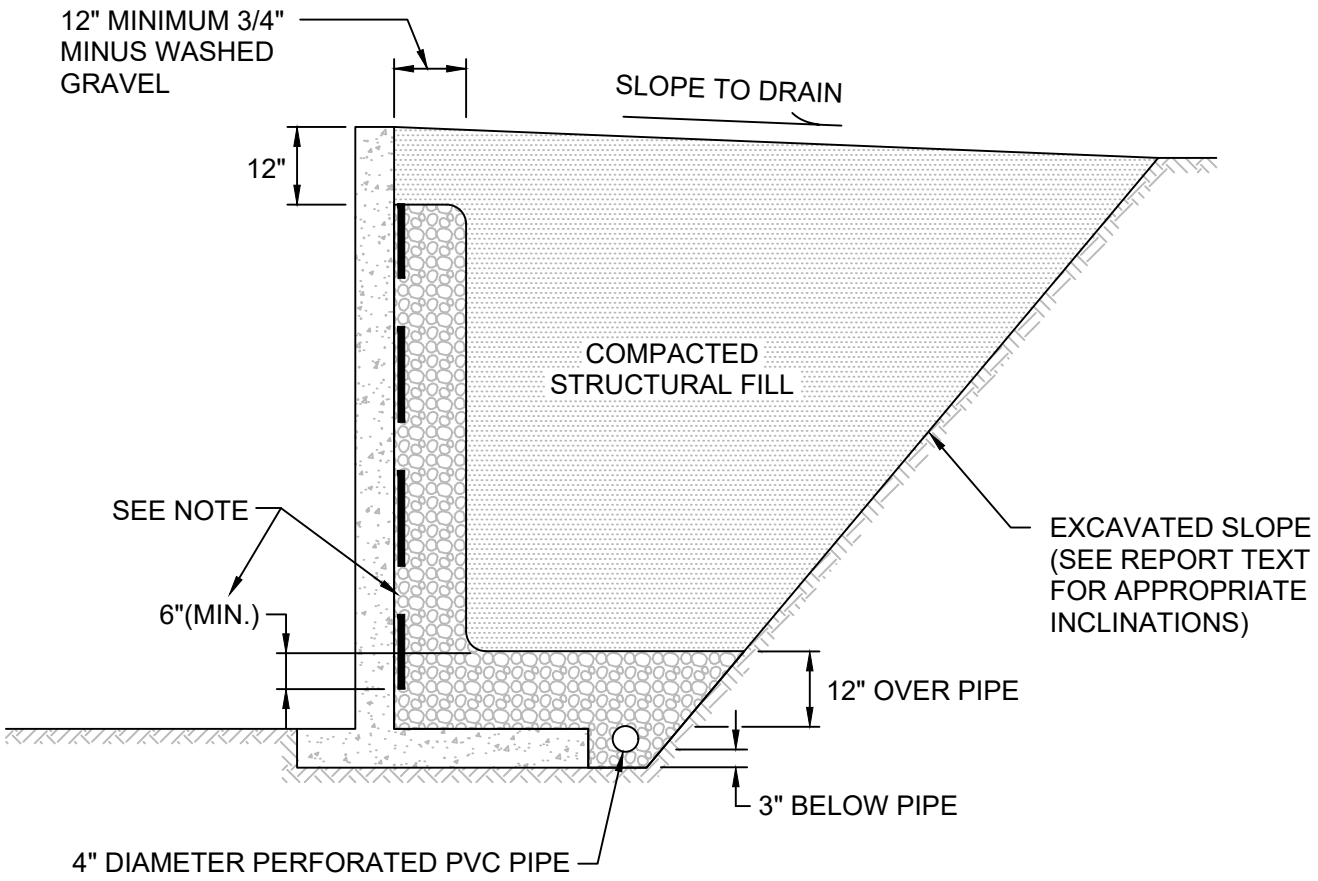

NOT TO SCALE

NOTE:

MIRADRAIN G100N PREFABRICATED DRAINAGE PANELS OR SIMILAR PRODUCT CAN BE SUBSTITUTED FOR THE 12-INCH WIDE GRAVEL DRAIN BEHIND WALL. DRAINAGE PANELS SHOULD EXTEND A MINIMUM OF SIX INCHES INTO 12-INCH THICK DRAINAGE GRAVEL LAYER OVER PERFORATED DRAIN PIPE.

Terra Associates, Inc.
Consultants in Geotechnical Engineering
Geology and
Environmental Earth Sciences

TYPICAL WALL DRAINAGE DETAIL
CORNELIUS 8
CORNELIUS, OREGON

Proj.No. T-8743	Date: MAY 2022	Figure 4

APPENDIX A
FIELD EXPLORATION AND LABORATORY TESTING

Cornelius 8
Cornelius, Oregon

On April 7, 2022, we completed our site exploration by observing soil conditions at seven test pits. The test pits were excavated using a mini-trackhoe to maximum depth of approximately 10 feet below existing site grades. Test pit locations were determined in the field by measuring from existing site features and using GPS coordinates from Google Earth. The approximate location of the test pit is shown on the attached Exploration Location Plan, Figure 2. Test Pit Logs are presented on Figures A-2 through A-8.

A geotechnical engineer from our office conducted the field exploration. Our representative classified the soil conditions encountered, maintained a log of each test pit, obtained representative soil samples, and recorded water levels observed during excavation. All soil samples were visually classified in accordance with the Unified Soil Classification System (USCS) described on Figure A-1.

Representative soil samples obtained from the test pits were placed in sealed plastic bags and taken to our laboratory for further examination and testing. The moisture content of selected samples was measured and is reported on the corresponding Test Pit Logs. Grain size analyses were also performed on select samples. The results are shown on Figure A-9.

Oregon Geotechnical Engineering, under subcontract with Terra Associates, Inc., conducted two electric CPTs at locations selected by Terra Associates, Inc. which are shown on Figure 2. The CPTs were advanced to depths of approximately 100 feet below the surface. The CPT was instrumented, and an approximately 1.5-inch diameter cone was pushed into the ground at a constant rate. During advancement, continuous measurements are made of the resistance to penetration of the cone and the friction of the outer surface of the sleeve. The cone is also equipped with a porous filter and a pressure transducer for measuring groundwater or pore water pressure generated. Measurements of tip and sleeve frictional resistance, pore pressure, and interpreted soil conditions are summarized in graphical form on the attached CPT Logs.

MAJOR DIVISIONS			LETTER SYMBOL	TYPICAL DESCRIPTION
COARSE GRAINED SOILS More than 50% material larger than No. 200 sieve size	**GRAVELS** More than 50% of coarse fraction is larger than No. 4 sieve	Clean Gravels (less than 5% fines)	GW	Well-graded gravels, gravel-sand mixtures, little or no fines.
			GP	Poorly-graded gravels, gravel-sand mixtures, little or no fines.
		Gravels with fines	GM	Silty gravels, gravel-sand-silt mixtures, non-plastic fines.
			GC	Clayey gravels, gravel-sand-clay mixtures, plastic fines.
	SANDS More than 50% of coarse fraction is smaller than No. 4 sieve	Clean Sands (less than 5% fines)	SW	Well-graded sands, sands with gravel, little or no fines.
			SP	Poorly-graded sands, sands with gravel, little or no fines.
		Sands with fines	SM	Silty sands, sand-silt mixtures, non-plastic fines.
			SC	Clayey sands, sand-clay mixtures, plastic fines.
FINE GRAINED SOILS More than 50% material smaller than No. 200 sieve size	**SILTS AND CLAYS** Liquid Limit is less than 50%		ML	Inorganic silts, rock flour, clayey silts with slight plasticity.
			CL	Inorganic clays of low to medium plasticity. (Lean clay)
			OL	Organic silts and organic clays of low plasticity.
	SILTS AND CLAYS Liquid Limit is greater than 50%		MH	Inorganic silts, elastic.
			CH	Inorganic clays of high plasticity. (Fat clay)
			OH	Organic clays of high plasticity.
HIGHLY ORGANIC SOILS			PT	Peat.

DEFINITION OF TERMS AND SYMBOLS

COHESIONLESS

Density	Standard Penetration Resistance in Blows/Foot
Very Loose	0-4
Loose	4-10
Medium Dense	10-30
Dense	30-50
Very Dense	>50

COHESIVE

Consistancy	Standard Penetration Resistance in Blows/Foot
Very Soft	0-2
Soft	2-4
Medium Stiff	4-8
Stiff	8-16
Very Stiff	16-32
Hard	>32

I	2" OUTSIDE DIAMETER SPILT SPOON SAMPLER
I	2.4" INSIDE DIAMETER RING SAMPLER OR SHELBY TUBE SAMPLER
▼	WATER LEVEL (Date)
Tr	TORVANE READINGS, tsf
Pp	PENETROMETER READING, tsf
DD	DRY DENSITY, pounds per cubic foot
LL	LIQUID LIMIT, percent
PI	PLASTIC INDEX
N	STANDARD PENETRATION, blows per foot

Terra Associates, Inc.
Consultants in Geotechnical Engineering
Geology and
Environmental Earth Sciences

UNIFIED SOIL CLASSIFICATION SYSTEM
CORNELIUS 8
CORNELIUS, OREGON

Proj.No. T-8743	Date: MAY 2022	Figure A-1

LOG OF TEST PIT NO. TP-1

FIGURE A-2

PROJECT NAME: Cornelius 8 **PROJ. NO:** T-8743 **LOGGED BY:** MJX

LOCATION: Cornelius, Oregon **SURFACE CONDITIONS:** Grass **APPROX. ELEV:** NA

DATE LOGGED: April 7, 2022 **DEPTH TO GROUNDWATER:** NA **DEPTH TO CAVING:** NA

Depth (ft)	Sample No.	Description	Consistency/ Relative Density	W (%)
0				
		(6-inches organic TOPSOIL) FILL: Brown SILT, moist, trace rootlets, trace sand, trace gravel. (ML)	Medium Stiff	22.2
1				
2				
3				26.0
		Brown SILT, moist, trace rootlets. (ML) LL = 27 PL = 23	Stiff	
4				
5				
6				33.0
		Gray SILT, moist, slightly mottled, trace sand, occasional rootlet. (ML)		
7				
8				
9			Very Stiff	
10				31.0
		Test Pit terminated at approximately 10 feet. No groundwater seepage observed. No caving observed.		
11				
12				

NOTE: This subsurface information pertains only to this test pit location and should not be interpreted as being indicative of other locations at the site.

Terra Associates, Inc.
Consultants in Geotechnical Engineering
Geology and
Environmental Earth Sciences

LOG OF TEST PIT NO. TP-2

FIGURE A-3

PROJECT NAME: Cornelius 8 **PROJ. NO:** T-8743 **LOGGED BY:** MJX

LOCATION: Cornelius, Oregon **SURFACE CONDITIONS:** Grass **APPROX. ELEV:** NA

DATE LOGGED: April 7, 2022 **DEPTH TO GROUNDWATER:** NA **DEPTH TO CAVING:** NA

Depth (ft)	Sample No.	Description	Consistency/ Relative Density	W (%)
0				
		(7-inches organic TOPSOIL)		
1		Brown SILT, moist, trace rootlets. (ML)	Medium Stiff	26.9
2				
3				
4				
5		Gray SILT, moist, slightly mottled, trace sand, occasional rootlet. (ML)	Stiff	
6				35.9
7				
8				
9			Very Stiff	
10				35.4
		Test Pit termintated at approximately 10 feet. No groundwater seepage observed. No caving observed.		
11				
12				

NOTE: This subsurface information pertains only to this test pit location and should not be interpreted as being indicative of other locations at the site.

Terra Associates, Inc.
Consultants in Geotechnical Engineering
Geology and
Environmental Earth Sciences

LOG OF TEST PIT NO. TP-3

FIGURE A-4

PROJECT NAME: Cornelius 8 **PROJ. NO:** T-8743 **LOGGED BY:** MJX

LOCATION: Cornelius, Oregon **SURFACE CONDITIONS:** Grass **APPROX. ELEV:** NA

DATE LOGGED: April 7, 2022 **DEPTH TO GROUNDWATER:** NA **DEPTH TO CAVING:** NA

Depth (ft)	Sample No.	Description	Consistency/ Relative Density	W (%)
0				
		(3-inches organic TOPSOIL) Brownish-gray SILT, moist, mottled, trace rootlets. (ML)	Medium Stiff	26.4
1				
2				
3				
4		Gray SILT, moist, wet at approximately 9 feet, slightly mottled, occasional rootlets. (ML)	Stiff	36.0
5				
6				
7				
8				
9			Very Stiff	
10				38.3
11		Test Pit terminated at approximately 10 feet. No groundwater seepage observed. No caving observed.		
12				

NOTE: This subsurface information pertains only to this test pit location and should not be interpreted as being indicative of other locations at the site.

Terra Associates, Inc.
Consultants in Geotechnical Engineering
Geology and
Environmental Earth Sciences

LOG OF TEST PIT NO. TP-4

FIGURE A-5

PROJECT NAME: Cornelius 8 **PROJ. NO:** T-8743 **LOGGED BY:** MJX

LOCATION: Cornelius, Oregon **SURFACE CONDITIONS:** Grass **APPROX. ELEV:** NA

DATE LOGGED: April 7, 2022 **DEPTH TO GROUNDWATER:** NA **DEPTH TO CAVING:** NA

Depth (ft)	Sample No.	Description	Consistency/ Relative Density	W (%)
0				
		(5-inches organic TOPSOIL)		
1		Brown SILT, moist, trace rootlets. (ML)	Medium Stiff	24.3
2				
3				
4		Gray SILT with sand, fine to coarse sand, moist, slightly mottled, occasional rootlet. (ML)		35.1
5			Stiff	
6				
7				
8				
9			Very Stiff	
10				37.6
11		Test Pit terminated at approximately 10 feet. No groundwater seepage observed. No caving observed.		
12				

NOTE: This subsurface information pertains only to this test pit location and should not be interpreted as being indicative of other locations at the site.

Terra Associates, Inc.
Consultants in Geotechnical Engineering
Geology and
Environmental Earth Sciences

LOG OF TEST PIT NO. TP-5

FIGURE A-6

PROJECT NAME: Cornelius 8 **PROJ. NO:** T-8743 **LOGGED BY:** MJX

LOCATION: Cornelius, Oregon **SURFACE CONDITIONS:** Grass **APPROX. ELEV:** NA

DATE LOGGED: April 7, 2022 **DEPTH TO GROUNDWATER:** NA **DEPTH TO CAVING:** NA

Depth (ft)	Sample No.	Description	Consistency/ Relative Density	W (%)
0				
		(3-inches organic TOPSOIL) FILL: Brownish-gray SILT with sand and gravel, fine to coarse sand, fine to coarse gravel, moist, slightly mottled, trace rootlets, occasional concrete fragment. (ML)	Stiff	15.9
1				
2				
3				13.8
		FILL: Bluish-gray SILT, moist, trace gravel, occasional rootlet, occasional organic. (ML)	Very Stiff	
4				
5				
6				28.3
		Brownish-gray SILT, moist, slightly mottled, occasional rootlet. (ML)	Medium Stiff	
7				
8				
9				
		Gray SILT, moist, mottled, occasional rootlet. (ML) LL = 37 PL = 31	Very Stiff	
10				37.0
		Test Pit terminated at approximately 10 feet. No groundwater seepage observed. No caving observed.		
11				
12				

NOTE: This subsurface information pertains only to this test pit location and should not be interpreted as being indicative of other locations at the site.

Terra Associates, Inc.
Consultants in Geotechnical Engineering
Geology and
Environmental Earth Sciences

LOG OF TEST PIT NO. TP-6

FIGURE A-7

PROJECT NAME: Cornelius 8 **PROJ. NO:** T-8743 **LOGGED BY:** MJX

LOCATION: Cornelius, Oregon **SURFACE CONDITIONS:** Grass **APPROX. ELEV:** NA

DATE LOGGED: April 7, 2022 **DEPTH TO GROUNDWATER:** NA **DEPTH TO CAVING:** NA

Depth (ft)	Sample No.	Description	Consistency/ Relative Density	W (%)
0				
		(4-inches organic TOPSOIL)		
1		Brown SILT, moist, trace rootlets. (ML)	Medium Stiff	25.6
2				
3				
4				
5				30.6
		Gray SILT, moist, slightly mottled, trace sand, occasional rootlet. (ML)	Stiff	
6				
7				
8				
9			Very Stiff	
10				35.4
		Test Pit terminated at approximately 10 feet. No groundwater seepage observed. No caving observed.		
11				
12				

NOTE: This subsurface information pertains only to this test pit location and should not be interpreted as being indicative of other locations at the site.

Terra Associates, Inc.
Consultants in Geotechnical Engineering
Geology and
Environmental Earth Sciences

LOG OF TEST PIT NO. TP-7

FIGURE A-8

PROJECT NAME: Cornelius 8 **PROJ. NO:** T-8743 **LOGGED BY:** MJX

LOCATION: Cornelius, Oregon **SURFACE CONDITIONS:** Grass **APPROX. ELEV:** NA

DATE LOGGED: April 7, 2022 **DEPTH TO GROUNDWATER:** NA **DEPTH TO CAVING:** NA

Depth (ft)	Sample No.	Description	Consistency/ Relative Density	W (%)
0				
		(4-inches organic TOPSOIL)		
1		FILL: Brown SILT, moist, trace rootlets, occasional gravel. (ML)	Medium Stiff	15.3
2		Brown SILT, moist, trace rootlets. (ML)		
3				24.2
4				
5		Gray SILT, moist, slightly mottled, trace sand, occasional rootlet. (ML)	Stiff	
6				36.9
7				
8				
9			Very Stiff	
10				33.5
11		Test Pit terminated at approximately 10 feet. No groundwater seepage observed. No caving observed.		
12				

NOTE: This subsurface information pertains only to this test pit location and should not be interpreted as being indicative of other locations at the site.

Terra Associates, Inc.
Consultants in Geotechnical Engineering
Geology and
Environmental Earth Sciences

Particle Size Distribution Report

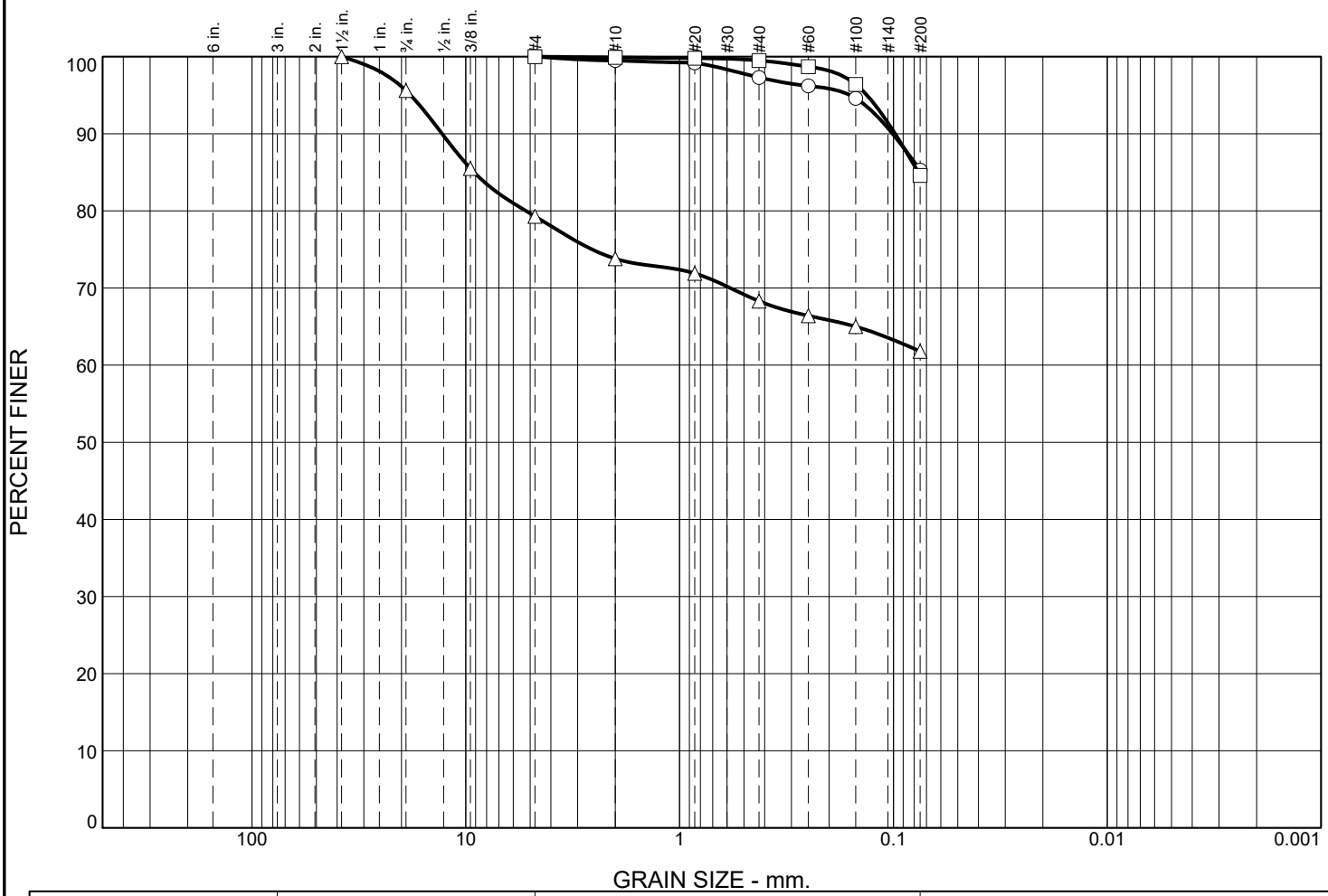

	% +3"	% Gravel		% Sand			% Fines	
		Coarse	Fine	Coarse	Medium	Fine	Silt	Clay
○	0.0	0.0	0.0	0.5	2.2	12.0	85.3	
□	0.0	0.0	0.0	0.1	0.4	14.9	84.6	
△	0.0	4.4	16.3	5.5	5.5	6.5	61.8	

	LL	PL	D_{85}	D_{60}	D_{50}	D_{30}	D_{15}	D_{10}	C_c	C_u
○										
□			0.0765							
△			9.1535							

Material Description	USCS	AASHTO
○ SILT	ML	
□ SILT with sand	ML	
△ SILT with sand and gravel	ML	

Project No. T-8743 **Client:** AltaBird Investments

Project: Cornelius 8

○ **Location:** Test Pit TP-2 **Depth:** 6 ft **Sample Number:** 2

□ **Location:** Test Pit TP-4 **Depth:** 10 ft **Sample Number:** 3

△ **Location:** Test Pit TP-5 **Depth:** 1.5 ft **Sample Number:** 1

Remarks:

○ Tested on April 22, 2022

□ Tested on April 22, 2022

△ Tested on April 22, 2022

Terra Associates, Inc.

Kirkland, WA

Figure A-9

Tested By: KJ

CPT LOGS

Terra Assosciates / CPT-1 / 1042 N 4th Ave Cornelius

OPERATOR: OGE DMM
CONE ID: DDG1532
HOLE NUMBER: CPT-1
TEST DATE: 4/8/2022 9:02:30 AM
TOTAL DEPTH: 94.160 ft

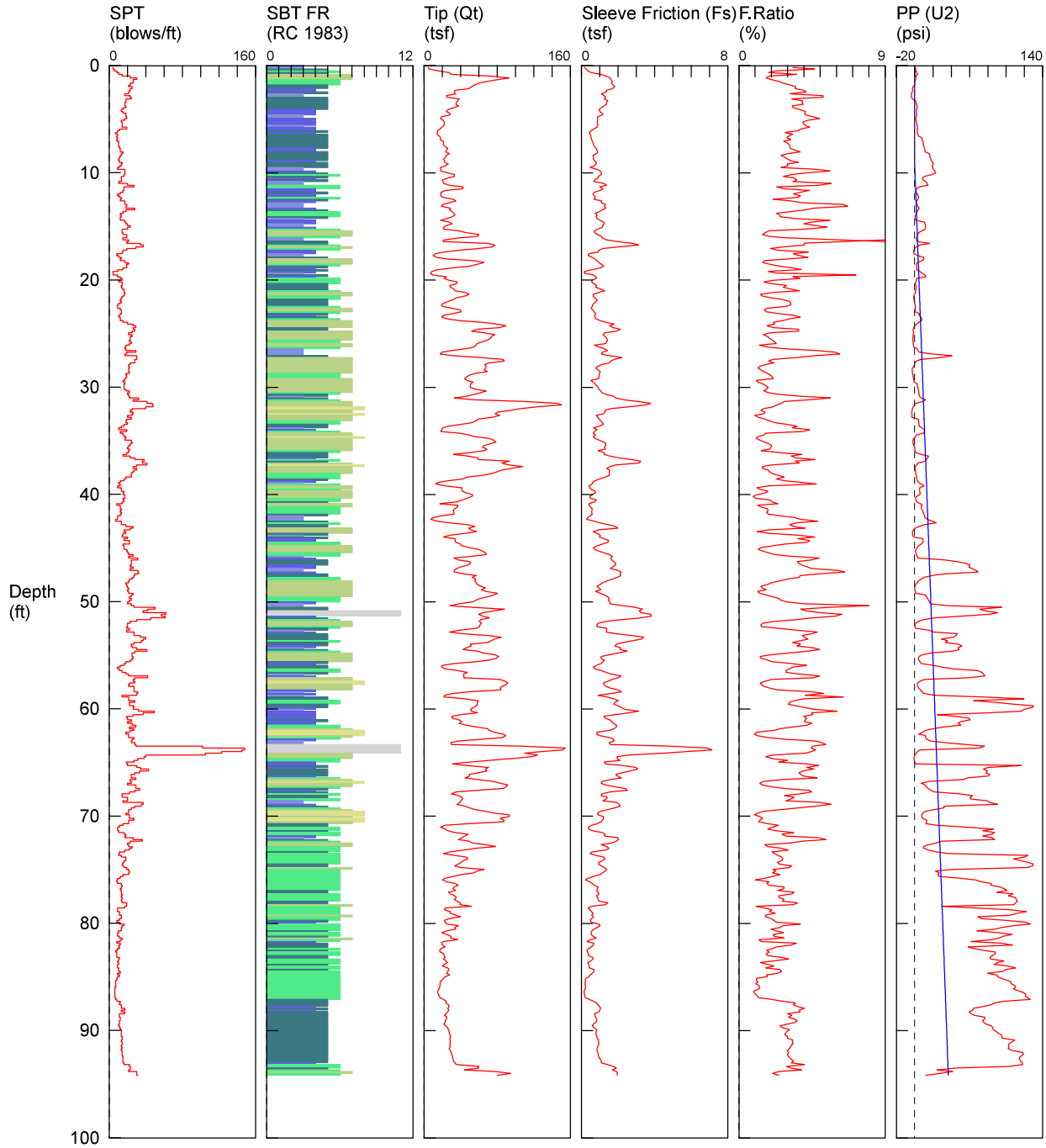

1 sensitive fine grained
2 organic material
3 clay
4 silty clay to clay
5 clayey silt to silty clay
6 sandy silt to clayey silt
7 silty sand to sandy silt
8 sand to silty sand
9 sand
10 gravelly sand to sand
11 very stiff fine grained (*)
12 sand to clayey sand (*)

*SBT/SPT CORRELATION: UBC-1983

Terra Assosciates / CPT-2 / 1042 N 4th Ave Cornelius

OPERATOR: OGE DMM
CONE ID: DDG1532
HOLE NUMBER: CPT-2
TEST DATE: 4/8/2022 10:30:54 AM
TOTAL DEPTH: 100.230 ft

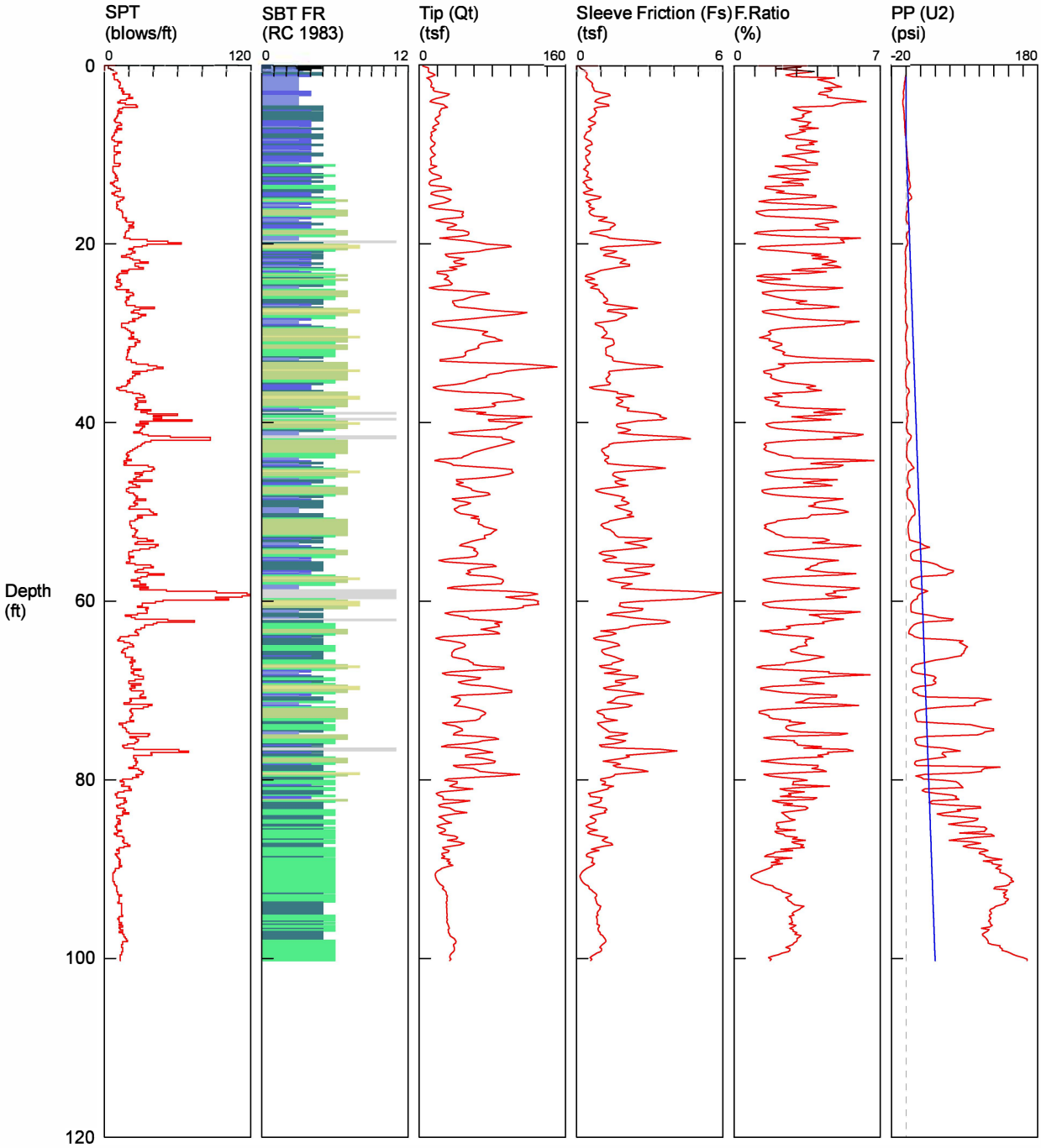

1 sensitive fine grained
2 organic material
3 clay
4 silty clay to clay
5 clayey silt to silty clay
6 sandy silt to clayey silt
7 silty sand to sandy silt
8 sand to silty sand
9 sand
10 gravelly sand to sand
11 very stiff fine grained (*)
12 sand to clayey sand (*)

*SBT/SPT CORRELATION: UBC-1983

APPENDIX B
LIQUEFACTION ANALYSIS RESULTS

LIQUEFACTION ANALYSIS

Cornelius 8

Hole No.=CPT-1 Water Depth=8 ft

Magnitude=7
Acceleration=.42g

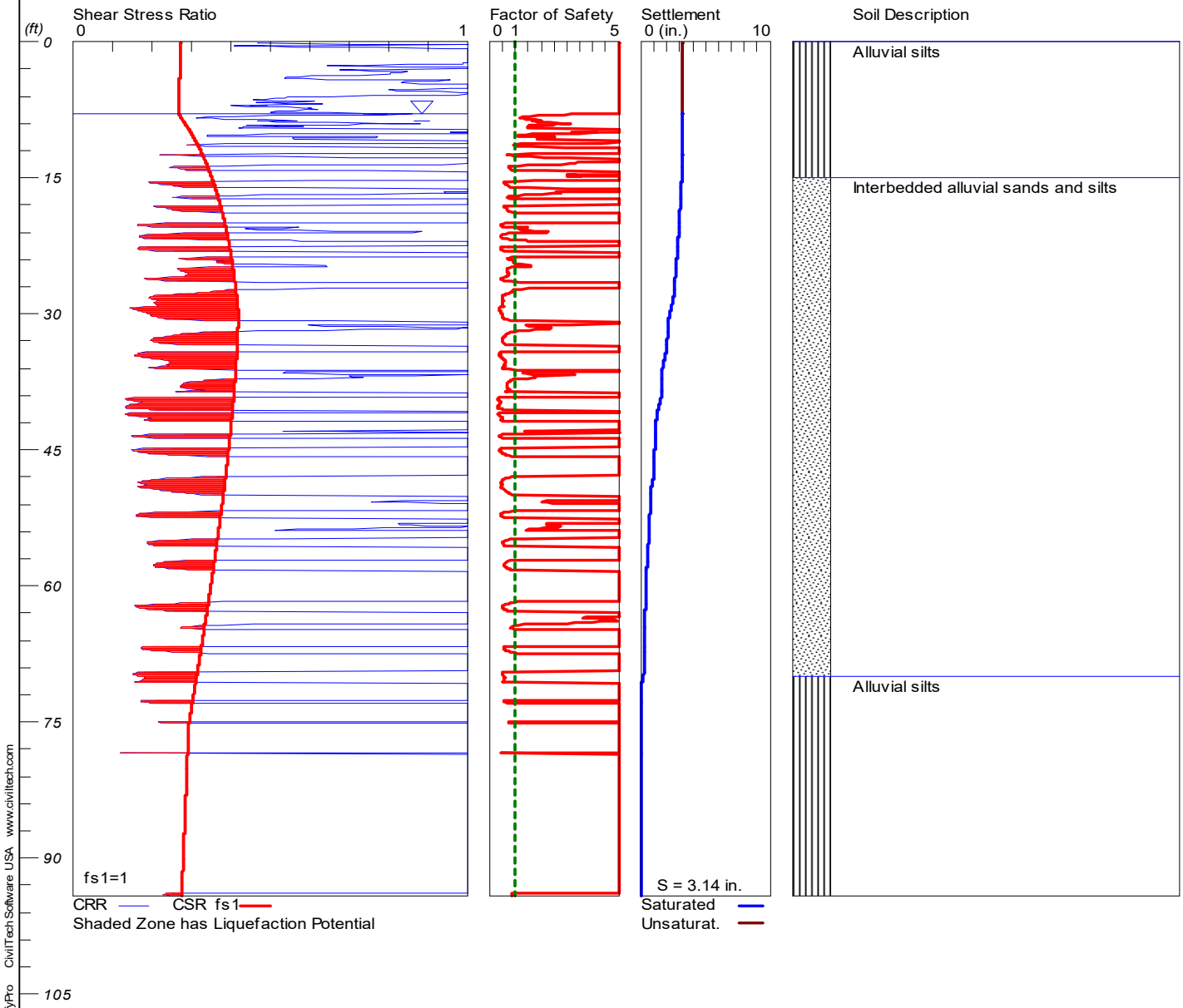

LIQUEFACTION ANALYSIS

Cornelius 8

Hole No.=CPT-2 Water Depth=8 ft
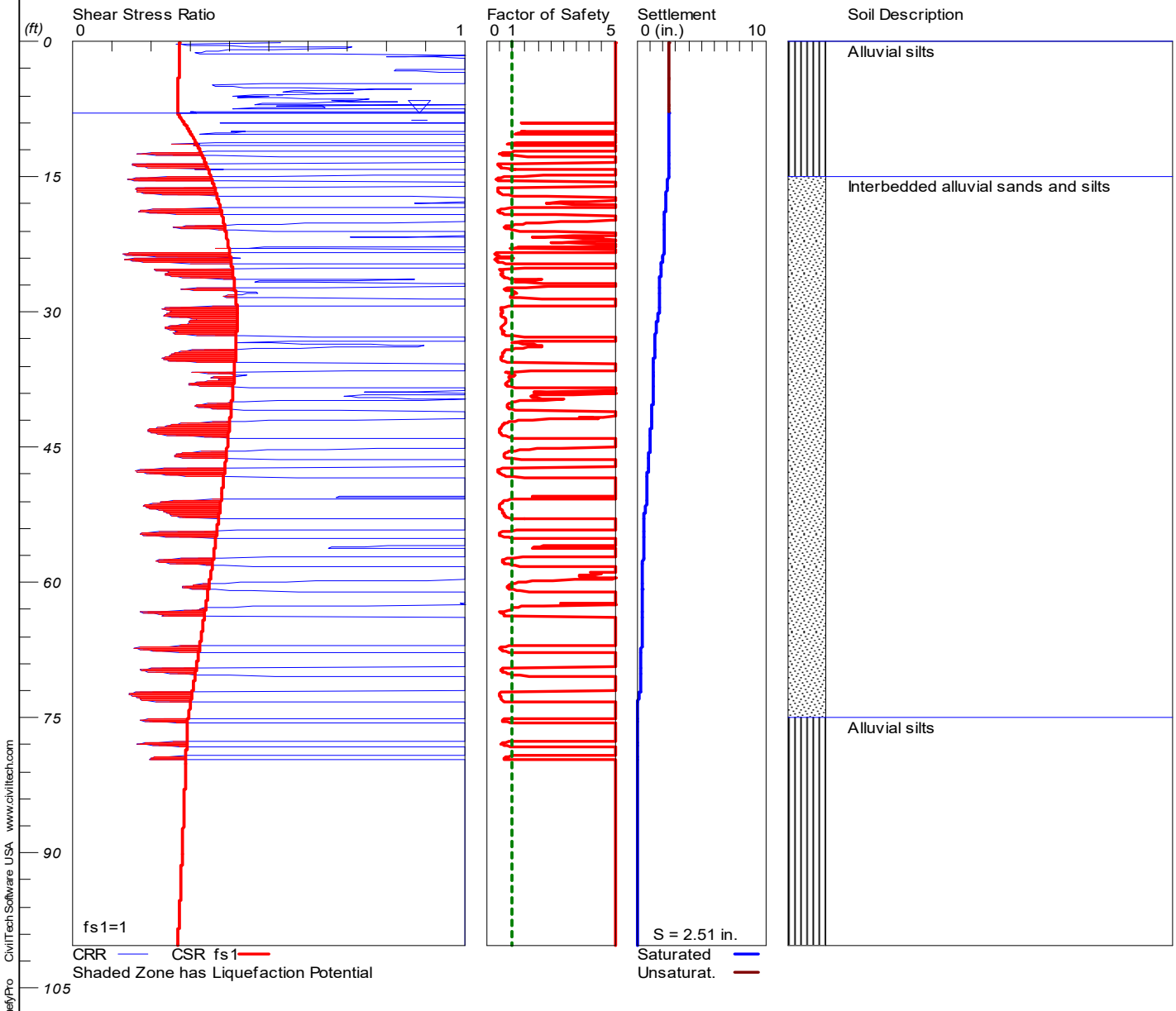
Magnitude=7
Acceleration=.42g