ALTABIRD INVESTMENTS CORNELIUS

TENTH AVENUE INDUSTRIAL CENTER Lot:13-16 CORNELIUS OR, 97113

MILDREN DESIGN GROUP
ARCHITECTURE | INTERIORS
4875 SW Griffith Drive Suite 300
Beaverton OR, 97005
(503) 244-0552

SHEET INDEX

NUMBER	SHEET NAME	DR- 2022.08.01	SET RELEASE 2	SET RELEASE 3
0 COVER SHEET				
CS	COVER SHEET	X		
01 GENERAL				
G0.1	RENDERING	X		
G0.2	RENDERING	X		
G0.3	RENDERING	X		
G2.0	SITE SURVEY/ EXISTING CONDITIONS	X		
G3.0	SITE LOGISTIC PLAN	X		
G3.1	CIRCULATION PLAN	X		
02 CIVIL				
C1.0	NOTES AND ABBREVIATIONS	X		
C1.1	EXISTING CONDITION	X		
C2.1	UTILITY PLAN	X		
C2.2	UPPER GRADING PLAN	X		
C2.3	LOWER GRADING PLAN	X		
C3.0	CIVIL DETAIL	X		
C3.1	CIVIL DETAILS	X		
C4.0	JURISDICTIONAL DETAILS	X		
03 LANDSCAPE				
L1.0	LANDSCAPE PLAN	X		
L2.0	LANDSCAPE SPECIFICATION AND DETAILS	X		
05 ARCHITECTURE				
A0.1	GENERAL NOTES	X		
A0.2	LEGEND, SCHEDULES & ASSEMBLIES			
A0.3	ACCESSIBILITY STANDARDS			
A1.0	SITE PLAN	X		
A1.2	SITE DETAILS	X		
A1.4	SITE DETAILS			
A2.0	FLOOR PLAN	X		
A2.3	REFLECTED CEILING PLAN			
A2.6	ROOF PLAN	X		
A3.0	ELEVATIONS	X		
A4.0	BUILDING SECTION	X		
A4.1	WALL SECTIONS			
A5.1	DETAILS			
A5.2	DETAILS			
A5.3	DETAILS			
07 LIGHTING				
LI 01	LIGHTING PLAN	X		
LI 02	LIGHTING PLAN	X		

DEFERRED SUBMITTALS

DOCUMENTS FOR DEFERRED SUBMITTAL ITEMS SHALL BE SUBMITTED TO THE REGISTERED DESIGN PROFESSIONAL IN RESPONSIBLE CHARGE WHO SHALL REVIEW THEM, STAMP THEM AND RETURN THEM TO THE GENERAL CONTRACTOR WITH A NOTATION INDICATING THE DEFERRED SUBMITTAL DOCUMENTS HAVE BEEN REVIEWED AND FOUND TO BE IN GENERAL CONFORMANCE TO THE DESIGN OF THE BUILDING. THE GENERAL CONTRACTOR WILL BE RESPONSIBLE FOR SUBMITTING DEFERRED SUBMITTAL ITEMS TO THE APPROPRIATE JURISDICTION FOR APPROVAL. THE DEFERRED SUBMITTAL ITEMS SHALL NOT BE INSTALLED UNTIL THE DEFERRED DOCUMENTS HAVE BEEN APPROVED BY THE BUILDING OFFICIAL.

NOTES:
· SUBMIT SHOP DRAWINGS FOR REVIEW OF DESIGN INTENT COMPLIANCE PRIOR TO FABRICATION OF THE FOLLOWING:

1. MECHANICAL
2. ELECTRICAL
3. LIGHTING COMPLIANCE
4. PLUMBING
5. STOREFRONT AND ALL OTHER GLAZING SYSTEMS
6. METAL GUARDRAILS AND HANDRAILS
7. MISCELLANEOUS STEEL, STEEL DECKING
8. ROOF TRUSSES
9. SHIP LADDER AND ATTACHMENTS
10. EXIT ILLUMINATION
11. FIRE SPRINKLER
12. FIRE ALARM SYSTEM
13. KNOX BOX

SEPARATE PERMIT TO BE OBTAINED FROM FIRE MARSHALL'S BUILDING

ANY INSTALLATION DETAILS FOR FIRE LIFE SAFETY SYSTEMS LISTED BELOW ARE FOR REFERENCE ONLY, WITH FINAL INSTALLATION REQUIREMENTS TO BE DETERMINED DURING THE TRADE PLAN REVIEW PROCESS AT THE FIRE MARSHALL'S OFFICE.
APPLICATION FOR SEPARATE PERMITS SHALL BE OBTAINED FROM THE FIRE MARSHALL'S OFFICE, PRIOR TO THE INSTALLATION OF THE FOLLOWING:
1. FIRE SPRINKLER
2. FIRE ALARM SYSTEM
3. UNDERGROUND FIRE LINE

ZONING REVIEW

ZONE :	GENERAL INDUSTRIAL M-1 ZONE
JURISDICTION :	CITY OF CORNELIUS
ALLOWABLE USE TYPE:	INDUSTRIAL USES , OUTDOOR STORAGE PER (CUP)

PROJECT DATA

Updated on 2022.06.07

SETBACKS

FRONT (WEST):	61'-3" > 20 FT, OKAY
SOUTH:	40'-2" > 5 FT, OKAY
NORTH:	20'-3" > 20 FT, OKAY
EAST:	140'-5" > 5 FT, OKAY
SITE AREA:	320,342 SF = 7.35 ACRE
BUILDING AREA:	154,643 SF (48.3%)
PARKING:	18,933 SF (5.9%)
PAVING AREA:	109,732 SF (34.3%)
LOT COVERAGE/ IMPERV AREA:	283,330 sf (88.4%)
LANDSCAPE AREA:	37,012 SF = 11.6% OF TOTAL SITE

THE PROJECT PARKING PROPOSES AS FOLLOWS: (PER TABLE 1 OF SECTION 18.145.030)

TOTAL GSF = *154,643* GSF

WAREHOUSE =148,088 GSF
(149088/1000)0.5 = **74.5 PARKING SPACES (MINIMUM)**
(149088/1000)1.2 = **185.6 PARKING SPACES (MAXIMUM)**

OFFICE = *5,555* GSF
(*5,555*/1000) X 2.7 = **15.0 PARKING SPACES (MINIMUM)**
(*5,555*/1000) X 4.1 = **22.8 PARKING SPACES (MAXIMUM)**

TOTAL PARKING SPACES REQUIRED = 89.5 (MINIMUM REQUIRED)
TOTAL PARKING SPACES REQUIRED= 201.7 (MAXIMUM , ZONE B)
TOTAL PARKING SPACES (PROVIDED)= 102 PROVIDED.

THE PROJECT BIKE PARKING PROPOSES AS FOLLOWS: (PER TABLE 1 OF SECTION 18.145.030)

WAREHOUSE = *154,643* GSF

(*154643*/1000)0.1 = **14.9 BIKE PARKING SPACES**

OFFICE = *5,555* GSF
(*5,0555*/1000) X 0.5 = **2.8 BIKE PARKING SPACES**

TOTAL BIKE PARKING SPACES REQUIRED = 17.7 (REQUIRED)
TOTAL BIKE PARKING SPACES (PROVIDED)= 18 PROVIDED. (12 LONG TERM, 6 SHORT TERM)

BUILDING SUMMARY

PROJECT DESCRIPTION

THE PROJECT PROPOSES THE NEW CONSTRUCTION OF SINGLE STORY BUILDINGS WITH ASSOCIATED PARKING, LANDSCAPE AND UTILITIES. TOTAL PROPOSED BUILDING SQUARE FOOTAGE IS APPROXIMATELY 155,500 SF. THE BUILDINGS ARE TILT-UP CONCRETE SHELL.

LOT DESCRIPTION

PARCEL 1:
LOT 13 AND 15, TENTH AVENUE INDUSTRIAL CENTER [PLAT BOOK 43, PAGE 0021], IN THE CITY OF FOREST GROVE, COUNTY OF WASHINGTON AND STATE OF OREGON.

PARCEL 2:
LOT 14 AND 16 TENTH AVENUE INDUSTRIAL CENTER [PLAT BOOK 43, PAGE 0021], IN THE CITY OF FOREST GROVE, COUNTY OF WASHINGTON AND STATE OF OREGON.

EXCEPTING THEREFROM THAT PORTION OF THE PROPERTY AS DESCRIBED IN DEED RECORDED JANUARY 22, 1997 AS FEE NO. 97006531. TOGETHER WITH THAT PORTION OF VACATED HOLLADAY STREET WHICH INSURED THERETO BY ORDINANCE NO. 712, RECORDED AUGUST 9, 1991 AS FEE NO. 91043303.
THE LEGAL DESCRIPTION WAS CREATED PRIOR TO JANUARY 01, 2008.

BUILDING CODE ANALYSIS

BASED ON 2019 OREGON STRUCTURAL SPECIALTY CODE (OSSC) INCLUDING PORTIONS OF THE 2018 INTERNATIONAL BUILDING CODE (IBC) , THE 2019 OREGON FIRE CODE, AND THE 2019 OREGON ZERO ENERGY READY COMMERCIAL CODE, INCLUDING PORTIONS OF ANSI/ASHRAE/IES STANDARD 90.1-2016.

OCCUPANCY AND CONSTRUCTION	PER IBC 304, 306, 311 AND 602.2
ASSUMED OCCUPANCY:	B, F1 AND S1
CONSTRUCTION TYPE:	III-B
NON-SEPARATED USE BETWEEN:	B/F1/S1 OCCUPANCIES, PER OSSC SECTION 508.3
BUILDING HEIGHT AND AREA	PER OSSC TABLE 503
ALLOWABLE AREA:	B: 76,000 S.F.
III-B SINGLE STORY SPRINKLED	F1: 48,000 S.F. S1: 70,500 S.F. UNLIMITED BUILDING AREA PER OSSC 507.4
ALLOWABLE HEIGHT:	75' (55' PER TABLE 503 PLUS 20' PER 504.2)
ALLOWABLE STORIES:	2 (1 STORY PER TABLE 503 PLUS ONE STORY PER 504.2)
PROPOSED BUILDING AREA:	(REFER TO SITE DATA FOR BUILDING AREA)
PROPOSED BUILDING HEIGHT:	**(PROPOSED 45') 1 STORY** (REFER TO ELEVATION SHEET FOR ACTUAL BUILDING HEIGHT)
FIRE-RESISTANCE RATING REQUIREMENTS	PER OSSC TABLE 601 AND 602
STRUCTURAL FRAME:	O HRS.
EXTERIOR BEARING WALLS:	2 HRS.
EXTERIOR NON-BEARING WALLS:	0 HRS.
INTERIOR NON-BEARING WALLS:	0 HRS.
FLOOR CONSTRUCTION:	0 HRS.
FIRE PROTECTION CLASS	BUILDING IS EQUIPPED WITH AN AUTOMATIC FIRE PROTECTION SYSTEM DESIGNED FOR HIGH PILED STORAGE UP TO 30'-0" WITH COMMODITY I-IV THROUGHOUT IN ACCORDANCE WITH OSSC 903.3.1.1.
INTERIOR FINISH	B: CLASS B AND C: PER TABLE 803.9 S1: CLASS C: PER SECTION TABLE 803.9
ROOMS AND ENCLOSED SPACES:	B, F1, AND S1: CLASS C; FLAME SPREAD INDEX: 76-200;SMOKE DEVELOPED INDEX: 0-450 PER SECTION 803.1.1
EXIT TRAVEL DISTANCE	
B OCCUPANCY:	COMMON PATH OF EGRESS TRAVEL DISTANCE DOES NOT EXCEED 100'-0" PER OSSC SECTION 1006.2.1, EXIT ACCESS TRAVEL DISTANCE DOES NOT EXCEED 300'-0" PER OSSC TABLE 1017.2
F1 OCCUPANCY:	COMMON PATH OF EGRESS TRAVEL DISTANCE DOES NOT EXCEED 100'-0" PER OSSC SECTION 1006.2.1 EXIT ACCESS TRAVEL DISTANCE DOES NOT EXCEED 250'-0" PER OSSC TABLE 1017.2
S1 OCCUPANCY:	COMMON PATH OF EGRESS TRAVEL DISTANCE DOES NOT EXCEED 100'-0" PER OSSC SECTION 1006.2.1 EXIT ACCESS TRAVEL DISTANCE DOES NOT EXCEED 250'-0" PER OSSC TABLE 1017.2
ACCESSIBLE PARKING/ACCESS TO SITE	SEE SITE PLAN FOR ACCESSIBLE PARKING STALL LOCATIONS AND ACCESS TO THE PUBLIC WAY

	REQUIRED	PROVIDED
STANDARD ACCESS	4	5
VAN ACCESSIBLE	1	1
TOTAL	5	6

FREEZE PROTECTION: GAS FIRED UNIT HEATING SYSTEM LOCATED IN WAREHOUSE WITH A THERMOSTAT HAVING A MAXIMUM SET POINT CAPACITY OF 45°F MOUNTED NOT LOWER THAN THE HEATING UNIT WITH AN OUTPUT CAPACITY NOT EXCEEDING 15 Btu/hr.ft2 OR 4 Watts/ft2 OF HEATED FLOOR AREA.

PRESPECTIVE VIEW

GENERAL NOTES

- SPECIAL INSPECTIONS - SEE STRUCTURAL
- STRUCTURAL OBSERVATION - SEE STRUCTURAL

APPROVALS

DR APPROVAL # DR-_____
CONDITIONAL USE PERMIT APPROVAL #CUP-______

GOVERNING CODE

2019 OREGON OREGON STRUCTURAL SPECIALTY CODE (OSSC)
2018 INTERNATIONAL FIRE CODE (IFC)
2019 OREGON MECHANICAL SPECIALTY CODE (OMSC)
2019 OREGON ELECTRICAL SPECIALTY CODE (OESC)
2019 OREGON PLUMBING SPECIALTY CODE (OPSC)
2021 OREGON ENERGY EFFICIENCY SPECIALTY CODE (OEESC)
2020 NFPA 13 STANDARD FOR INSTALLATION OF SPRINKLER SYSTEMS
2020 NFPA 72 NATIONAL FIRE ALARM AND SIGNALING CODE
2020 NFPA 110 STANDARD FOR EMERGENCY AND STANDBY POWER SYSTEMS
2010 ADA STANDARDS FOR ACCESSIBLE DESIGN

ENERGY CODE ANALYSIS ASHRAE 90.1-2016

2019 OREGON STRUCTURAL SPECIALITY CODE) CLIMATE ZONE 4C (NON RESIDENTIAL)

ENVELOPE REQUIREMENTS	(REQUIRED)	(PROVIDED) PER TABLE 5.5-4
ROOF (INSULATION ABOVE DECK)	R-30 C.I.	R-30 C.I.
WALL ABOVE GRADE (MASS) SLAB ON GRADE (MASS)	R-9.5 C.I R15 FOR 24"	R-9.5 C.I. R15 FOR 24"
SKYLIGHT	(REQUIRED) PER TABLE 5.5-4	(PROVIDED)
U FACTOR SHGC	0.5 0.4	0.5 0.4

PROJECT TEAM

Owner:
ALTABIRD INVESTMENTS
1411 N CEDAR STREET
TACOMA, WA 98406
VOICE: 206.605.4898
CONTACT PERSON: BRENDAN MASON
EMAIL: BRENDAN@ALTABIRDINVESTMENTS.COM

Civil Engineer:
W D Y
6443 SW Beaverton-Hillsdale Hwy. • Suite 210 • Portland, OR 97221
CONTACT PERSON: **KARI KUBOYAMA**
EMAIL: KARI@WDYI.COM

Planner
FIRDT FORTY FEET
Portland, Oregon 97210
802-595-9448
CONTACT PERSON: **William Grimm**
EMAIL: will@firstfortyfeet.com

Surveyor
FIRM
ADDR
ADDR
CONTACT PERSON: NAME
EMAIL: email

Architect:
MILDREN DESIGN GROUP, P.C.
4875 SW GRIFFITH DRIVE, SUITE 300
BEAVERTON, OR 97005
VOICE: 503-244-0552 FAX: 503-244-0417
CONTACT PERSON: **TUAN Q. LUU, NANG MA**
EMAIL: tuan@mdgpc.com, nang@mdgpc.com

Structural Engineer:
T.M. Rippey Consulting Engineers
7650 SW BEVELAND STREET, SUITE 100
TIGARD, OREGON 97223
CONTACT PERSON: **Ralph Turnbaugh, PE**
EMAIL: RTURNBAUGH@TMRIPPEY.COM

Landscape Architect:
OTTEN ASSOCIATES
3933 SOUTH KELLY AVENUE, SUITE B.
PORTLAND, OR 97239
CONTACT PERSON: ERIN HOLSONBACK
EMAIL: erin@ottenla.com, lupin@ottenla.com

General Contractor:
PERLO CONSTRUCTION
11450 SW AMU STREET
TUALATIN, OR 97062
VOICE: 503-642-2090
CONTACT PERSON: Chris McLaughlin

VICINITY MAP

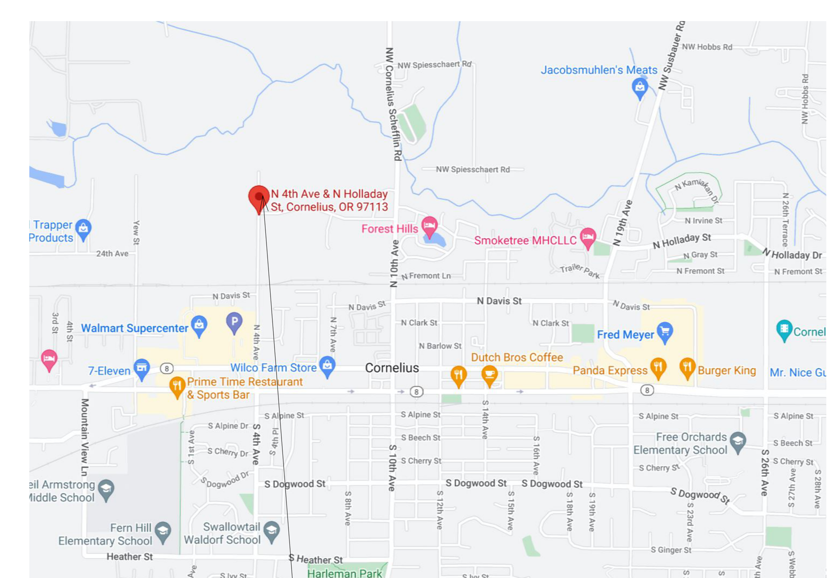

PROJECT SITE

Client/ Owner:
ALTABIRD INVESTMENTS

Project:
ALTABIRD INVESTMENTS CORNELIUS

TENTH AVENUE INDUSTRIAL CENTER Lot:13-16, CORNELIUS OR, 97113

Sheet Title:
COVER SHEET

Revisions:

#	Description	Date

MILDREN DESIGN GROUP, P.C., 2022, ALL RIGHTS RESERVED ©

THESE DRAWINGS ARE THE PROPERTY OF MILDREN DESIGN GROUP, P.C., AND ARE NOT TO BE USED OR REPRODUCED IN ANY MANNER, EXCEPT WITH THE PRIOR WRITTEN PERMISSION OF MILDREN DESIGN GROUP, P.C.

Date:	2022-08-10
Drawn by:	Checked by:
Author	Checker
Job Number:	122013
Sheet	CS

DESIGN REVIEW

C:\Users\nmm\Documents\122013 Cornelius Property_Central 2022_nangXEFFM.rvt

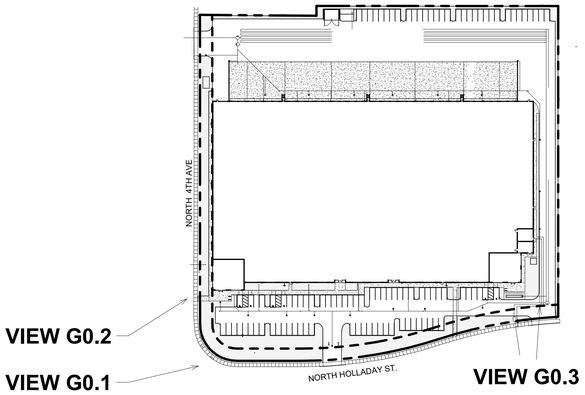

MILDREN
DESIGN
GROUP

ARCHITECTURE | INTERIORS

4875 SW Griffith Drive Suite 300
Beaverton OR, 97005
(503) 244-0552

Client/ Owner:

ALTABIRD INVESTMENTS

Project:

ALTABIRD INVESTMENTS CORNELIUS

TENTH AVENUE
INDUSTRIAL CENTER
Lot:13-16, CORNELIUS
OR, 97113

Sheet Title:

RENDERING

Revisions:

#	Description	Date

MILDREN DESIGN GROUP, P.C., 2022, ALL RIGHTS RESERVED ©

THESE DRAWINGS ARE THE PROPERTY OF MILDREN DESIGN GROUP, P.C., AND ARE NOT TO BE USED OR REPRODUCED IN ANY MANNER, EXCEPT WITH THE PRIOR WRITTEN PERMISSION OF MILDREN DESIGN GROUP, P.C.

Date:	2022-06-10
Drawn by:	Checked by:
Author	Checker
Job Number:	122013

Sheet

G0.1

C:\Users\mmd\Documents\122013 Cornelius Property_Central 2022_v-mgd0879A.rvt

MILDREN
DESIGN
GROUP

ARCHITECTURE | INTERIORS

4875 SW Griffith Drive Suite 300
Beaverton OR, 97005
(503) 244-0552

Client/ Owner:

ALTABIRD INVESTMENTS

Project:

ALTABIRD INVESTMENTS CORNELIUS

TENTH AVENUE INDUSTRIAL CENTER
Lot:13-16, CORNELIUS
OR, 97113

Sheet Title:

RENDERING

Revisions:

#	Description	Date

MILDREN DESIGN GROUP, P.C., 2022, ALL RIGHTS RESERVED ©

THESE DRAWINGS ARE THE PROPERTY OF MILDREN DESIGN GROUP, P.C., AND ARE NOT TO BE USED OR REPRODUCED IN ANY MANNER, EXCEPT WITH THE PRIOR WRITTEN PERMISSION OF MILDREN DESIGN GROUP, P.C.

Date: 2022-06-10

Drawn by: Author

Checked by: Checker

Job Number: 122013

Sheet

G0.2

C:\Users\mmd\Documents\122013 Cornelius Property_Central 2022_v4rvg5EF8A.rvt

MILDREN
DESIGN
GROUP

ARCHITECTURE | INTERIORS

4875 SW Griffith Drive Suite 300
Beaverton OR, 97005
(503) 244-0552

Client/ Owner:

ALTABIRD INVESTMENTS

Project:

ALTABIRD INVESTMENTS CORNELIUS

TENTH AVENUE
INDUSTRIAL CENTER
Lot:13-16, CORNELIUS
OR, 97113

Sheet Title:

RENDERING

Revisions:

#	Description	Date

MILDREN DESIGN GROUP, P.C., 2022, ALL RIGHTS RESERVED ©

THESE DRAWINGS ARE THE PROPERTY OF MILDREN DESIGN GROUP, P.C., AND ARE NOT TO BE USED OR REPRODUCED IN ANY MANNER, EXCEPT WITH THE PRIOR WRITTEN PERMISSION OF MILDREN DESIGN GROUP, P.C.

Date: 2022-06-10

Drawn by: Author

Checked by: Checker

Job Number: 122013

Sheet

G0.3

C:\Users\mmr\Documents\122013 Cornelius Property_Central 2022_mergR19.rvt

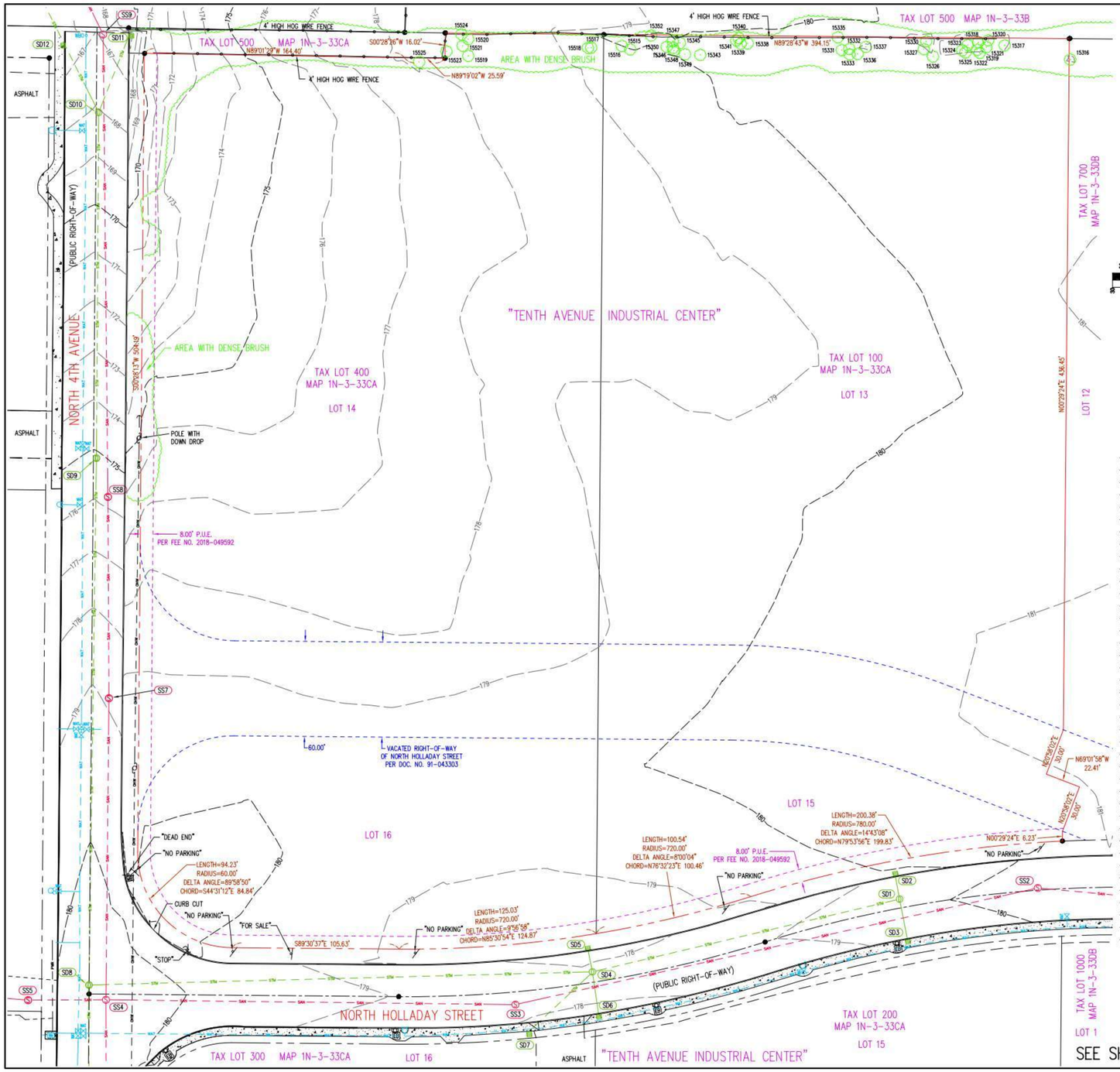

SCALE 1" = 30 FEET

LEGEND

- DECIDUOUS TREE
- FIRE HYDRANT
- WATER METER
- WATER VALVE
- WATER BLOWOFF VALVE
- SANITARY SEWER MANHOLE
- STORM SEWER CURB INLET
- STORM SEWER MANHOLE
- GUY WIRE ANCHOR
- UTILITY POLE
- POWER JUNCTION BOX
- STREET LIGHT
- SIGN
- MAILBOX
- FOUND SURVEY MONUMENT
- RIGHT-OF-WAY LINE
- BOUNDARY LINE
- PROPERTY LINE
- CENTERLINE
- CURB
- EDGE OF PAVEMENT
- EASEMENT
- FENCE LINE
- GRAVEL EDGE
- OVERHEAD WIRE
- STORM SEWER LINE
- SANITARY SEWER LINE
- WATER LINE

TREE INFORMATION

15316	SPLIT 2-11" DECIDUOUS
15317	30" DECIDUOUS CLUSTER
15318	6" DECIDUOUS
15319	6" DECIDUOUS
15320	7" DECIDUOUS
15321	6" DECIDUOUS
15322	9" DECIDUOUS
15323	21" DECIDUOUS
15324	6" DECIDUOUS
15325	6" DECIDUOUS
15326	7" DECIDUOUS
15327	SPLIT 4" & 7" DECIDUOUS
15330	8" DECIDUOUS
15332	12" DECIDUOUS
15333	SPLIT 4" & 7" DECIDUOUS
15335	SPLIT 5" & 8" DECIDUOUS
15336	8" DECIDUOUS
15337	SPLIT 2-3" & 8" DECIDUOUS
15338	SPLIT 3", 5" & 6" DECIDUOUS
15339	SPLIT 6" & 14" DECIDUOUS
15340	8" DECIDUOUS
15341	7" DECIDUOUS
15343	SPLIT 3" & 6" DECIDUOUS
15345	SPLIT 2-6" & 7" DECIDUOUS
15346	10" DECIDUOUS
15347	SPLIT 4" & 7" DECIDUOUS
15348	6" DECIDUOUS
15349	9" DECIDUOUS
15350	9" DECIDUOUS
15352	24" DECIDUOUS
15515	SPLIT 6" & 9" DECIDUOUS
15516	9" DECIDUOUS
15517	SPLIT 4", 6" & 7" DECIDUOUS
15518	SPLIT 3" & 2-6" DECIDUOUS
15519	SPLIT 5", 3-6" & 8" DECIDUOUS
15520	6" DECIDUOUS
15521	7" DECIDUOUS
15523	14" DECIDUOUS
15524	SPLIT 6" & 7" DECIDUOUS
15525	9" DECIDUOUS

SANITARY SEWER INFORMATION

SS1 MANHOLE
RIM = 181.11'
8" IE IN (N) = 168.7'
8" IE IN (S) = 168.5'
8" IE IN (SE) = 168.2'
8" IE OUT (W) = 168.2'

SS2 MANHOLE
RIM = 180.55'
8" IE IN (E) = 167.4'
8" IE OUT (SW) = 167.3'

SS3 MANHOLE
RIM = 178.30'
8" IE IN (NE) = 165.8'
8" IE IN (S) = 165.9'
8" IE OUT (W) = 165.7'

SS4 MANHOLE
RIM = 180.38'
8" I.E. IN (S) = 164.8'
8" I.E. IN (W) = 164.8'
8" I.E. IN (E) = 164.7'
8" I.E. OUT (N) = 164.7'

SS5 MANHOLE
RIM = 180.21'
8" I.E. IN (W) = 165.3'
8" I.E. OUT (E) = 165.1'

SS6 MANHOLE
RIM = 180.13'
6" I.E. IN (W) = 169.4'
6" I.E. IN (W) = 172.2'
8" I.E. IN (S) = 165.3'
8" I.E. OUT (N) = 165.2'

SS7 MANHOLE
RIM = 178.92'
8" I.E. IN (S) = 163.6'
8" I.E. IN (W) = 163.2'
8" I.E. IN (E) = 163.2'
8" I.E. OUT (N) = 162.9'

SS8 MANHOLE
RIM = 175.81'
8" I.E. IN (S) = 162.2'
8" I.E. OUT (N) = 162.0'

SS9 MANHOLE
RIM = 166.90'
8" IE IN (S) = 159.6'
8" IE IN (SW) = 163.3'
12" IE IN (E) = 160.1'
8" IE OUT (NW) = 159.3'

STORM SEWER INFORMATION

SD1 MANHOLE
RIM = 179.54'
10" IE IN (N) = 173.7'
12" IE IN (E) = 173.7'
10" IE IN (S) = 173.7'
12" IE OUT (W) = 173.6'

SD2 CURB INLET
RIM/TOP CURB = 179.71'
10" IE OUT (SE) = 175.8'

SD3 CURB INLET
RIM/TOP CURB = 179.71'
10" IE OUT (NW) = 175.9'

SD4 MANHOLE
RIM = 178.12'
10" IE IN (NW) = 172.2'
8" IE IN (N) = 172.2'
12" IE IN (NE) = 172.1'
8" IE IN (SE) = 172.0'
10" IE IN (S) = 171.8'
24" IE OUT (W) = 171.7'

SD5 CURB INLET
RIM/TOP CURB = 178.29'
10" IE OUT (SE) = 174.7'
SUMP = 174.2'

SD6 CATCH BASIN
T.O.G = 178.29'
10" IE OUT (NW) = 174.3'
SUMP = 173.7'

SD7 DITCH INLET
LOW PT T.O.G. = 177.21'
8" IE OUT (E) = 175.6'
SUMP = 173.7'

SD8 MANHOLE
RIM = 180.56'
24" I.E. IN (S) = 170.9'
18" I.E. IN (E) = 171.0'
18" I.E. IN (W) = 171.1'
30" I.E. OUT (N) = 170.9'

SD9 MANHOLE
RIM = 175.17'
30" I.E. IN (S) = 170.0'
30" I.E. OUT (N) = 166.8'

SD10 MANHOLE
RIM = 168.04'
30" IE IN (S) = 162.5'
12" IE IN (W) = 162.6'
12" IE IN (E) = 162.7'
12" IE IN (NE) = 162.8'
30" IE OUT (NW) = 162.5'

SD11 CURB INLET
RIM/TOP CURB = 166.83'
12" IE OUT (SW) = 163.3'
SUMP = 162.3'

SD12 CURB INLET
RIM/TOP CURB = 167.19'
10" IE OUT (E) = 163.6'
SUMP = 163.7'

UTILITY STATEMENT

THE UNDERGROUND UTILITIES SHOWN HAVE BEEN LOCATED FROM FIELD SURVEY INFORMATION AND EXISTING DRAWINGS. THE SURVEYOR MAKES NO GUARANTEE THAT THE UNDERGROUND UTILITIES SHOWN COMPRISE ALL SUCH UTILITIES IN THE AREA, EITHER IN SERVICE OR ABANDONED. THE SURVEYOR FURTHER DOES NOT WARRANT THAT THE UNDERGROUND UTILITIES SHOWN ARE IN THE EXACT LOCATION INDICATED ALTHOUGH HE DOES CERTIFY THAT THEY ARE LOCATED AS ACCURATELY AS POSSIBLE FROM INFORMATION AVAILABLE. THE SURVEYOR HAS NOT PHYSICALLY LOCATED THE UNDERGROUND UTILITIES.

SEE SHEET 1 FOR BOUNDARY AND TITLE REPORT INFORMATION

NORTHWEST SURVEYING, INC.
1815 NW 169th PLACE, SUITE 2090
BEAVERTON, OR 97006
PH:(503) 848-2127 FAX:(503) 848-2179
EMAIL: nwsurveying@nwsurvy.com

LOCATED IN THE SW 1/4 OF SECTION 33, TOWNSHIP 1, NORTH, RANGE 3 WEST, W.M., CITY OF CORNELIUS, WASHINGTON COUNTY, OREGON

ALTA/NSPS LAND TITLE SURVEY

CORNELIUS, OREGON
TAX LOTS 100 AND 400
TAX MAP 1N-3-33CA

DRAWING NO: 2422 ALTA
SCALE: AS NOTED
DRAWING GENERATED BY L02004
DRAWN BY: CDW
CHECKED BY: CHS

PREPARED FOR:
ALTABIRD INVESTMENTS
1411 N. CEDAR STREET
TACOMA, WA 98406

REVISIONS:
PRELIM RELEASE: APR. 19, 2022

REGISTERED PROFESSIONAL LAND SURVEYOR
PRELIMINARY
OREGON
JANUARY 15, 2002
CLINTON H. STUBBS JR.
55469LS
RENEWS: 06/30/22

JOB NUMBER
2422

SHEET
2 OF 2

0 10' 20' 40' 80'

DESIGN REVIEW

MILDREN DESIGN GROUP
ARCHITECTURE | INTERIORS
4875 SW Griffith Drive Suite 300
Beaverton OR, 97005
(503) 244-0552

Client/ Owner:
ALTABIRD INVESTMENTS

Project:
ALTABIRD INVESTMENTS CORNELIUS

TENTH AVENUE INDUSTRIAL CENTER
Lot:13-16, CORNELIUS
OR, 97113

Sheet Title:
SITE SURVEY/ EXISTING CONDITIONS

Revisions:

#	Description	Date

MILDREN DESIGN GROUP, P.C., 2022, ALL RIGHTS RESERVED ©

THESE DRAWINGS ARE THE PROPERTY OF MILDREN DESIGN GROUP, P.C., AND ARE NOT TO BE USED OR REPRODUCED IN ANY MANNER, EXCEPT WITH THE PRIOR WRITTEN PERMISSION OF MILDREN DESIGN GROUP, P.C.

Date: 2022-06-10
Drawn by: Author
Checked by: Checker
Job Number: 122013
Sheet
G2.0

C:\Users\mnc\Documents\122013 Cornelius Property_Central 2022_corrg\G2.0.1.rvt

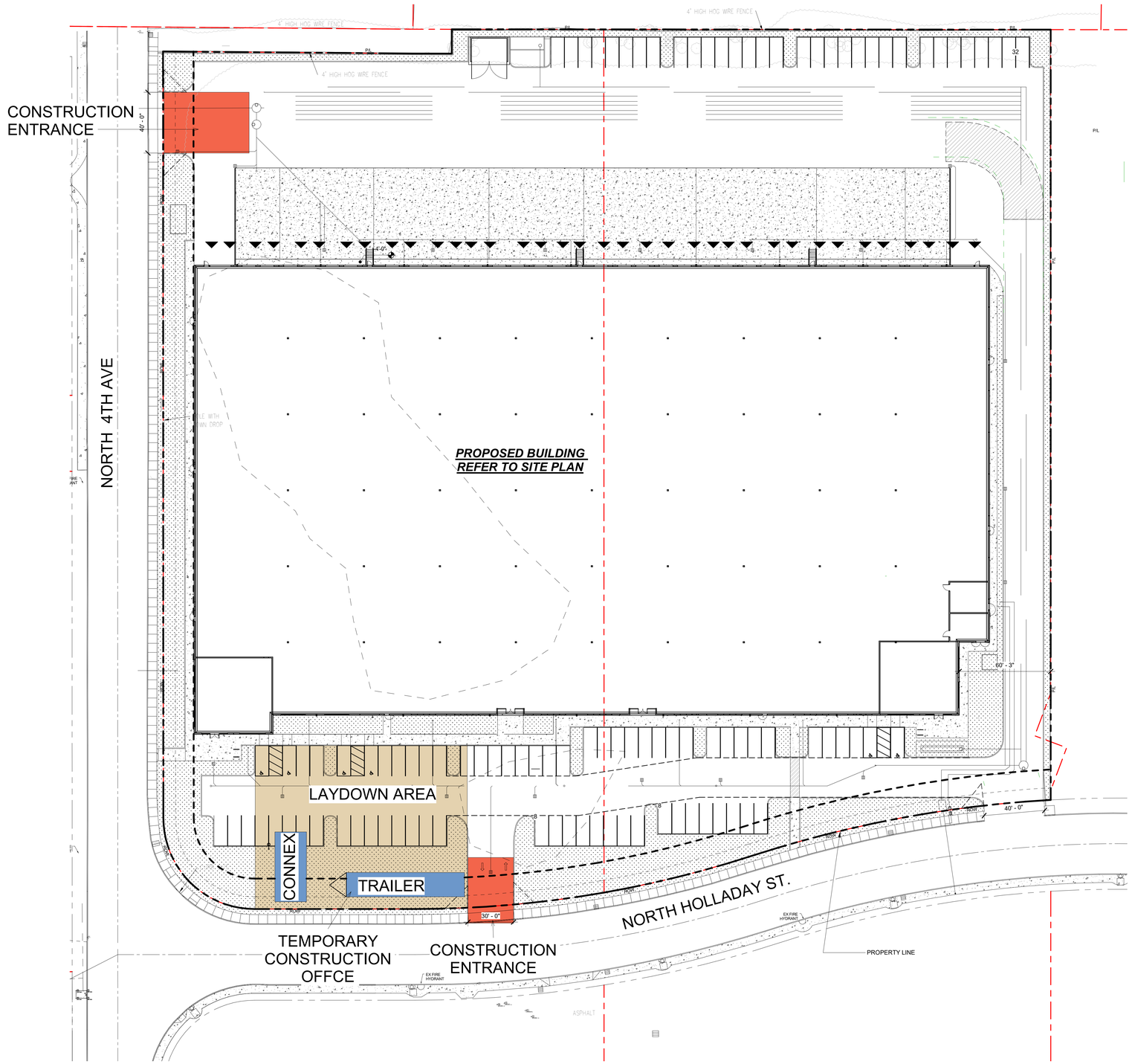

DURATION OF THE TEMPORARY CONSTRUCTION OFFICE 18-24 MONTHS

0 10' 20' 40' 80'

DESIGN REVIEW

MILDREN DESIGN GROUP

ARCHITECTURE | INTERIORS

4875 SW Griffith Drive Suite 300
Beaverton OR, 97005
(503) 244-0552

Client/ Owner:

ALTABIRD INVESTMENTS

Project:

ALTABIRD INVESTMENTS CORNELIUS

TENTH AVENUE INDUSTRIAL CENTER
Lot:13-16, CORNELIUS
OR, 97113

Sheet Title:

SITE LOGISTIC PLAN

Revisions:

#	Description	Date

MILDREN DESIGN GROUP, P.C., 2022, ALL RIGHTS RESERVED ©

THESE DRAWINGS ARE THE PROPERTY OF MILDREN DESIGN GROUP, P.C., AND ARE NOT TO BE USED OR REPRODUCED IN ANY MANNER, EXCEPT WITH THE PRIOR WRITTEN PERMISSION OF MILDREN DESIGN GROUP, P.C.

Date: 2022-06-10

Drawn by: Author

Checked by: Checker

Job Number: 122013

Sheet

G3.0

C:\Users\mmm\Documents\122013 Cornelius Property_Central 2022_orig\G3TM.rvt

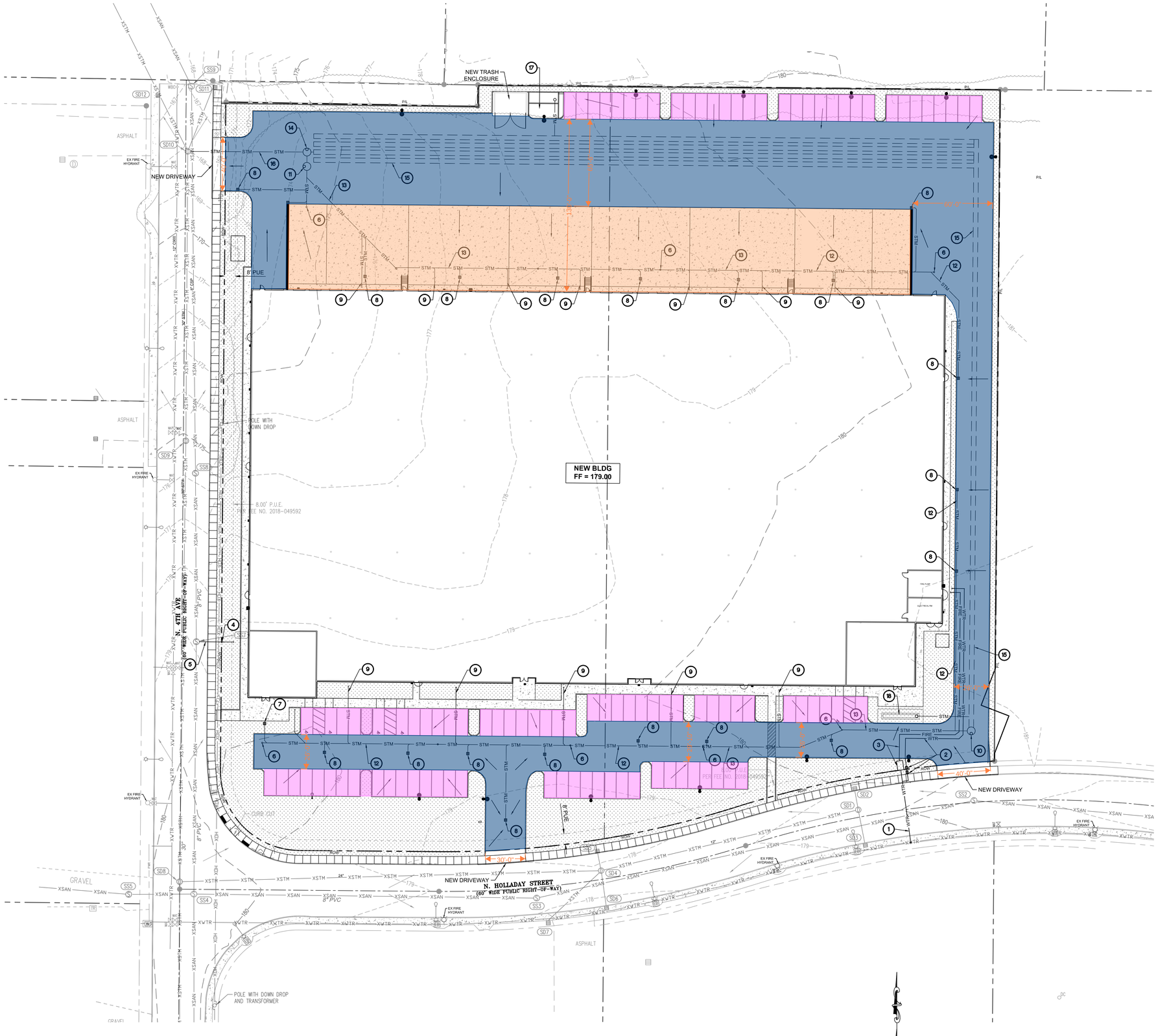

1 C2.1 **CIRCULATION PLAN**

SCALE: 1" = 30'-0"

GRAPHIC SCALE

30 0 15 30 60 120

(IN FEET)
1 inch = 30 feet

KEYNOTES FOR THIS SHEET

MARK	DESCRIPTION
1	TAP EXISTING WATER MAIN AND INSTALL NEW 4" D.I. CLASS 52 WATER SERVICE PIPE.
2	INSTALL NEW 2" WATER METER AND 2" DCVA W/ 2" DOMESTIC COPPER WATER SERVICE TO BLDG. SEE PLUMBING FOR CONTINUATION INTO BUILDING.
3	INSTALL NEW FIRE WATER SERVICE VAULT WITH 4" DOUBLE CHECK DETECTOR ASSEMBLY WITH FDC RISER ASSEMBLY, TAMPER SWITCHES, FIRE ALARM SWITCHES AND 1/3 H.P. SUMP PUMP WITH FLOAT SWITCH AND HIGH WATER ALARM. CONTRACTOR TO VERIFY AND CONFIRM VAULT MINIMUM SIZE FOR CONFIGURATION WITH FDC.
4	INSTALL NEW SANITARY C.O. WITHIN 1' OF PROPERTY LINE.
5	INSTALL NEW 6" DIA PVC ASTM D3034 SANITARY LINE AT 2% MIN SLOPE. CONNECT TO EXISTING STUB AT MANHOLE. VERIFY ELEVATION AT CONNECTION. SEE PLUMBING FOR CONTINUATION INTO BUILDING.
6	INSTALL TYP. CLEAN OUT ASSEMBLY.
7	INSTALL NEW LANDSCAPE AREA DRAIN. CONNECT TO SITE STORM WITH 4" DIA. ABS SCHED 40 SOLD WALL PIPE AT 1.0% MIN SLOPE. SEE GRADING PLAN FOR RIM ELEVATIONS, TYP.
8	INSTALL NEW CATCH BASIN, SEE GRADING PLAN FOR RIM ELEVATIONS, TYP.
9	NEW STORM FROM BUILDING ROOF DOWNSPOUTS. CONNECT TO SITE STORM WITH 4" DIA ABS AT 1.0% MIN SLOPE. COORDINATE WITH ARCH FOR EXACT LOCATIONS.
10	INSTALL NEW FILTERED MANHOLE FOR STORMWATER TREATMENT. PROVIDE 5, 27" HT CARTRIDGES.
11	INSTALL NEW FILTERED MANHOLE FOR STORMWATER TREATMENT. PROVIDE 7, 27" HT CARTRIDGES.
12	INSTALL 6" DIA. PVC ASTM D3034, SDR 35 STORM PIPE AT 1.0% MIN SLOPE.
13	INSTALL 8" DIA. PVC ASTM D3034, SDR 35 STORM PIPE AT 0.8% MIN SLOPE.
14	INSTALL NEW DETENTION CONTROL MANHOLE.
15	INSTALL 2,435 LF OF 42" DIA. DETENTION PIPE. BOTTOM OF PIPE = 163.75
16	INSTALL 85 LF OF 12" DIA. PVC ASTM D3034, SDR35 STM PIPE AT 1% SLOPE TO EXISTING MANHOLE. CONTRACTOR TO FIELD VERIFY EXISTING STUB, APPROX IE(12")=162.70 +/-
17	INSTALL 175 SF BOTTOM LIDA PLANTER. PARKING AREA TO SHED TO PLANTER VIA CURB CUTS. PROVIDE OVERFLOW TO DETENTION SYSTEM.
18	INSTALL 65 SF BOTTOM LIDA RAIN GARDEN WITH 3:1 SIDE SLOPES. DRIVE AISLE AREA TO SHED TO RAIN GARDEN VIA CURB CUTS. PROVIDE OVERFLOW TO DETENTION SYSTEM.

PARKING

TRUCK PARKING / LOADING

TRUCK AND VEHICLE CIRCULATION

MILDREN DESIGN GROUP

ARCHITECTURE | INTERIORS

4875 SW Griffith Drive Suite 300
Beaverton OR, 97005
(503) 244-0552

Client/ Owner:

ALTABIRD INVESTMENTS

Project:

ALTABIRD INVESTMENTS CORNELIUS

TENTH AVENUE INDUSTRIAL CENTER
Lot:13-16, CORNELIUS
OR, 97113

Sheet Title:

CIRCULATION PLAN

Revisions:

#	Description	Date

MILDREN DESIGN GROUP, P.C., 2022. ALL RIGHTS RESERVED ©

THESE DRAWINGS ARE THE PROPERTY OF MILDREN DESIGN GROUP, P.C., AND ARE NOT TO BE USED OR REPRODUCED IN ANY MANNER, EXCEPT WITH THE PRIOR WRITTEN PERMISSION OF MILDREN DESIGN GROUP, P.C.

Date: 2022-04-26

Drawn by: JR

Checked by: KK

Job Number: 122013

Sheet

G3.1

FILE: 22120_C2.1.DWG C2.1 6/13/2022 9:35:35 AM – ROLLINS

CIVIL NOTES

01.0 GENERAL

1. THESE NOTES SET MINIMUM STANDARDS FOR CONSTRUCTION. THE DRAWINGS GOVERN OVER THE GENERAL NOTES TO THE EXTENT SHOWN.
2. CONTRACTOR SHALL VERIFY ALL DIMENSIONS AND CONDITIONS ON DRAWINGS AND IN FIELD. NOTIFY OWNER'S REPRESENTATIVE OF ANY DISCREPANCIES PRIOR TO PROCEEDING WITH WORK.
3. CONTRACTOR SHALL BE SOLELY RESPONSIBLE TO PROVIDE FOR ALL NECESSARY TRAFFIC CONTROL PLANS, TEMPORARY SHORING AND OTHER INCIDENTAL WORK NEEDED FOR THE COMPLETION OF THE WORK.
4. WHERE REFERENCE IS MADE TO IBC, ASTM, AISC, ACI OR OTHER STANDARDS, THE LATEST ISSUE AT THE BUILDING PERMIT DATE SHALL APPLY.
5. ALL WORK AND MATERIALS SHALL BE IN COMPLIANCE WITH THE PROJECT SPECIFICATIONS, THE "INTERNATIONAL BUILDING CODE" (IBC), THE INTERNATIONAL PLUMBING CODE (IPC) AND THE PROVISIONS OF "STANDARD SPECIFICATIONS FOR HIGHWAY CONSTRUCTION", 2018 EDITION, OREGON STATE HIGHWAY DIVISION (OSHD), AS AMENDED BY ALL OTHER STATE AND LOCAL CODES, JURISDICTIONS, PERMITS, AND BUILDING REQUIREMENTS THAT APPLY. THE CONTRACTOR SHALL OBTAIN ALL APPLICABLE CONSTRUCTION PERMITS AND SUBMIT TRAFFIC CONTROL PLANS PRIOR TO PROCEEDING WITH WORK.
6. EXISTING UTILITIES, SITE AND TOPOGRAPHIC INFORMATION SHOWN HEREON ARE BASED ON RECORD DRAWINGS PROVIDED BY OR MADE AVAILABLE BY THE OWNER. THE CONTRACTOR IS REQUIRED TO FIELD VERIFY THE LOCATION OF EXISTING FEATURES AND UTILITIES PRIOR TO CONSTRUCTION, AND SHALL ARRANGE FOR THE RELOCATION OF ANY IN CONFLICT WITH THE PROPOSED WORK. MINOR ADJUSTMENTS BASED ON FIELD CONDITIONS SHALL BE MADE BY THE CONTRACTOR AT NO ADDITIONAL COST TO THE OWNER. LOCAL COUNTY AND CITY RECORD DRAWINGS SHOULD BE REVIEWED BY THE CONTRACTOR FOR THIS PURPOSE. THE EXISTENCE AND LOCATION OF EXISTING FEATURES ARE NOT GUARANTEED. ADDITIONAL UNDERGROUND UTILITIES MAY EXIST. THE ENGINEER ASSUMES NO RESPONSIBILITY FOR THE ACCURACY OR COMPLETENESS OF INFORMATION OBTAINED FROM RECORD DRAWINGS OR INFORMATION PROVIDED BY OTHERS, IMPLIED OR OTHERWISE.
7. ATTENTION EXCAVATORS: OREGON LAW REQUIRES YOU TO FOLLOW RULES ADOPTED BY OREGON UTILITY NOTIFICATION CENTER. THOSE RULES ARE SET FORTH BY OAR 952-001-0010 THROUGH OAR 952-001-0090. YOU MAY OBTAIN COPIES OF THESE RULES FROM THE CENTER BY CALLING (503) 232-1987. IF YOU HAVE ANY QUESTIONS ABOUT THE RULES, YOU MAY CONTACT THE CALL CENTER. YOU MUST NOTIFY THE CENTER AT LEAST 2 BUSINESS DAYS, BUT NOT MORE THAN 10 BUSINESS DAYS, BEFORE COMMENCING AN EXCAVATION. CALL (800) 332-2344.
8. CONTRACTOR SHALL CAREFULLY MAINTAIN BENCHMARKS, PROPERTY CORNERS, MONUMENTS, AND OTHER REFERENCE POINTS. IF SUCH POINTS ARE DISTURBED OR DESTROYED BY CONSTRUCTION ACTIVITIES, THE CONTRACTOR SHALL PAY FOR THEIR REPLACEMENT BY EMPLOYING A PROFESSIONAL LAND SURVEYOR TO RESET PROPERTY CORNERS AND OTHER SUCH MONUMENTS.
9. CONTRACTOR TO COORDINATE AND PROVIDE INSTALLATION AS NECESSARY OF ALL PUBLIC AND PRIVATE UTILITIES FOR THIS PROJECT INCLUDING WATER SERVICE, SANITARY SEWER SERVICE, STORM DRAIN, ELECTRIC POWER, COMMUNICATIONS, CABLE TV, NATURAL GAS, STREET LIGHTS, ETC.
10. CONTRACTOR TO MAINTAIN ONE COMPLETE SET OF APPROVED DRAWINGS ON SITE FOR THE SOLE PURPOSE OF CONTRACTOR RECORDING AS-BUILT INSTALLATION OF IMPROVEMENTS. SUBMIT AS-BUILT PLANS TO OWNER.
11. ALL CONSTRUCTION ACTIVITY SHALL BE DONE IN A SAFE AND NEAT MANNER AND UNDER OBSERVATION BY CITY FORCES.
12. THE CONTRACTOR SHALL BE SOLELY RESPONSIBLE FOR COMPLYING WITH ALL CONSTRUCTION SAFETY, HEALTH AND OTHER RULES AND REGULATIONS FROM OSHA, DEQ, STATE, AND LOCAL REGULATING AGENCIES FOR SAFETY AND INSTALLATION OF THE WORK INCLUDING BUT NOT LIMITED TO SHORING, BRACING, ERECTION/ INSTALLATION, FALL PROTECTION, GUARDRAILS, ETC.
13. ALL SEWER TRENCH LINES AND EXCAVATIONS SHALL BE PROPERLY SHORED AND BRACED TO PREVENT CAVING. UNUSUALLY DEEP EXCAVATIONS MAY REQUIRE EXTRA SHORING AND BRACING. ALL SHEETING, SHORING, AND BRACING OF TRENCHES SHALL CONFORM TO OREGON OCCUPATIONAL SAFETY AND HEALTH DIVISION (OSHA) REGULATIONS AND THE CITY OR COUNTY STANDARD CONSTRUCTION SPECIFICATIONS.
14. ALL UNDERGROUND UTILITIES SHALL BE INSTALLED PRIOR TO CONSTRUCTION OF CURBS, RETAINING WALLS, OR PAVEMENT.
15. ALL WATER AND SEWERAGE APPURTENANCES SHALL CONFORM TO APWA, OREGON CHAPTER, "STANDARDS SPECIFICATIONS FOR PUBLIC WORKS CONSTRUCTION"; THE APPROVED CONSTRUCTION DRAWINGS; AND CITY OF MOLALLA REQUIREMENTS.
16. ELEVATION DATUM IS BASED ON NATIONAL GEODETIC SURVEY BENCH MARK PID: RD1508, ELEVATION =105.09 (NAVD 88), BRASS CAP LOCATED ON THE CORNER OF HIGHWAY 99E AND S BARLOW ROAD.
17. EXISTING TOPOGRAPHY, UTILITIES, AND ELEVATION DATUM ARE BASED ON THE OWNER'S TOPOGRAPHIC SURVEY PROVIDED BY THE OWNER/DEVELOPER. THE EXISTENCE AND LOCATION OF EXISTING FEATURES ARE NOT GUARANTEED. ADDITIONAL UNDERGROUND UTILITIES MAY EXIST. THE ENGINEER/WDY ASSUMES NO RESPONSIBILITY FOR THE ACCURACY OR COMPLETENESS OF INFORMATION PROVIDED BY OTHERS, IMPLIED OR OTHERWISE.
18. DETAILS SHOWN ON THE DRAWINGS ARE INTENDED TO APPLY AT ALL SIMILAR CONDITIONS AND LOCATIONS.
19. DO NOT SCALE INFORMATION FROM DRAWINGS.
20. CONTRACTOR TO REMOVE FROM SITE EXCESS SOIL OR OTHER MATERIALS NOT REUSABLE FOR THIS PROJECT, AND COMPLY WITH ALL RECOMMENDATIONS OF THE PROJECT GEOTECHNICAL REPORT.
21. APPROPRIATE BENCHING OF FILLS IS REQUIRED FOR FILLS OVER 5 FEET IN HEIGHT ON SLOPES IN EXCESS OF 5 HORIZONTAL TO 1 VERTICAL. THE GEOTECHNICAL ENGINEER SHALL INSPECT BENCHES PRIOR TO FILL PLACEMENT.
22. CUT AND FILL SLOPES SHALL BE PROTECTED FROM EROSION. SUCH CONTROL MAY CONSIST OF APPROPRIATE REVEGETATION OR OTHER ACCEPTABLE MEANS AND METHODS. EROSION CONTROL MEASURES SHALL BE IN PLACE PRIOR TO EARTHWORK OR SITE STRIPPING.
23. MATERIAL IN SOFT SPOTS WITHIN 5 FEET OF RIGHT-OF-WAYS, PAVEMENTS OR BUILDINGS SHALL BE REMOVED TO THE DEPTH REQUIRED TO PROVIDE A FIRM SUBGRADE AND SHALL BE REPLACED WITH 1-1/2"-0" CRUSHED ROCK COMPACTED TO 95% PER ASTM D1557.
24. THE NATIVE SUBGRADE SURFACE SHALL BE APPROVED BEFORE SCARIFYING OR PLACING ANY FILL OR BASE ROCK BY THE SOILS ENGINEER. THE UPPER 8 INCHES OF NATIVE SUBGRADE IS TO BE SCARIFIED, DRIED AND RECOMPACTED TO 90% MAXIMUM DRY DENSITY PER ASTM D698. PLACE GEOTEXTILE FABRIC (MIRAFI 500X, PROPEX GEOTEX 200ST, CONTECH C200 OR EQUAL) BELOW ALL VEHICULAR PAVEMENT. FOR WET WEATHER CONSTRUCTION (AS DETERMINED BY THE GEOTECHNICAL ENGINEER) A WORKING BLANKET OF PIT RUN OR CRUSHED ROCK IS TO BE LAID OVER GEOTEXTILE FABRIC. ON-SITE COMPACTION TESTS AND DEFLECTION TEST(S) PERFORMED WITH A 50,000 LB. VEHICLE MUST BE PERFORMED AND WITNESSED BY THE GEOTECHNICAL ENGINEER. NO DEFLECTION IS ALLOWED AND ALL BUILDING AND PAVEMENT AREAS MUST BE PROOF-ROLLED. DURING WET WEATHER CONSTRUCTION (AS DETERMINED BY THE SOILS ENGINEER), PROVIDE THE PROOF-ROLL TEST OVER THE BASE ROCK SURFACES PRIOR TO PLACEMENT OF ANY PAVEMENT.
25. CRUSHED ROCK BASE MATERIAL AND PIPE ZONE MATERIAL SHALL BE CRUSHED ROCK CONFORMING TO OREGON DEPARTMENT OF TRANSPORTATION (ODOT) SECTION 00640 AND 00641 AND BE COMPACTED TO 95% OF MAXIMUM DENSITY AS DETERMINED IN ACCORDANCE WITH ASTM D1557.
26. 3/4" - 0" CRUSHED ROCK PIPE ZONE AND BACKFILL MATERIAL IS REQUIRED FOR ALL UTILITY LINES, CONDUITS AND LEVELING COURSES. REFER TO THE TYPICAL UTILITY CONDUIT TRENCH AND PAVEMENT DETAILS.
27. ASPHALTIC CONCRETE (A.C.) PAVEMENT SHALL BE A LEVEL 4 HMAC SUPER PAVE WITH AN ASPHALT CONTENT PER OREGON DOT CLASSIFICATION AND APPROVED JMFM FOR ALL LIFTS. PAVEMENT SHALL BE PLACED ONLY ON DRY, CLEAN AND PROPERLY PREPARED SURFACES, AND WHEN CONDITIONS MEET THE SPECIFICATIONS AS SET FORTH IN THE MOST RECENT EDITION OF THE OREGON DOT SPECIFICATIONS. ALL NEW PAVEMENT AREAS SHALL CONFORM TO THE TYPICAL PAVEMENT SECTION DETAIL. ALL A.C. PAVEMENT TO BE COMPACTED TO 91% OF MAXIMUM DENSITY PER ASTM D2041 FOR FIRST LIFTS LESS THAN 3-INCHES AND 92% COMPACTION SHALL BE REQUIRED FOR SUBSEQUENT LIFTS.
28. ALL JOINTS BETWEEN A.C AND CONCRETE STRUCTURES MUST BE TACKED WITH BITUMASTIC. NO EXCEPTIONS ALLOWED.
29. ALL PORTLAND CEMENT CONCRETE PAVEMENT SHALL HAVE A 28 DAY MINIMUM ULTIMATE STRENGTH OF 4000 PSI. PROVIDE A MINIMUM OF (4) TEST CYLINDERS IN ACCORDANCE WITH CURRENT IBC AT EACH POUR.
   A. MINIMUM MIX REQUIREMENTS:
      I. CEMENT CONTENT PER YARD: 5 SACKS.
      II. MAXIMUM WATER/CEMENT RATIO: 0.45. FLY ASH MEETING ASTM C618 AND WITH LOSS ON IGNITION LESS THAN 3% MAY BE ADDED TO THE CEMENT, BUT NOT MORE THAN 15% BY WEIGHT.
      III. SLUMP: 3 INCH TO 4 INCH. DEVIATING FROM DESIGN SLUMP +1/2 INCH TO -1 INCH. WHEN CONCRETE IS TO BE PUMPED, ADD PLASTICIZERS MEETING ASTM C494 AND PROVIDE A NEW MIX DESIGN. DO NOT ADD WATER.
      IV. ADMIX: PROVIDE WATER REDUCING ADMIX (MASTER BUILDERS) AND REDUCE WATER USED BY 10% MINIMUM FOR ALL SLABS.
      V. AIR ENTRAINMENT: PER ACI 301 AND 306 AT ALL EXTERIOR SLABS AND FLAT WORK, 5.5% AIR MINIMUM.
      VI. ALL ADMIXTURES TO BE COMPATIBLE FROM SAME MANUFACTURER.
   B. PLACE AND CURE ALL CONCRETE PER ACI CODES AND STANDARDS.
   C. SLEEVES, PIPES OR CONDUITS OF ALUMINUM SHALL NOT BE EMBEDDED IN STRUCTURAL CONCRETE UNLESS EFFECTIVELY COATED.
   D. PROVIDE CONTROL JOINTS IN ALL SLABS ON GRADE AS SHOWN ON PLANS. IN AREAS WHERE JOINTS ARE NOT SHOWN, INSTALL IN SQUARE PATTERN AT 15' ON CENTER EACH WAY MAXIMUM. INSTALL JOINTS AT ALL RE-ENTRANT CORNERS.
   E. PROVIDE 1/4" PREMOLDED EXPANSION JOINT MATERIAL BETWEEN SLABS AND WALLS THAT ARE NOT DOWELED TOGETHER, AND AROUND COLUMNS THAT DO NOT HAVE SLAB BLOCKOUTS.
31. ON-SITE HANDICAP/DISABILITY ACCESS ROUTES SHALL COMPLY WITH THE AMERICANS WITH DISABILITIES ACT (ADA), STATE AND LOCAL REGULATIONS. NOTIFY ARCHITECT AND ENGINEER PRIOR TO INSTALLING FINISH PAVEMENT IN CONFLICT WITH ADA REQUIREMENTS. CONTRACTOR TO VERIFY GRADING OF ADA PATHS OF TRAVEL AND PARKING STALLS AND CONTACT ENGINEER OF RECORD FOR ADDITION WORK IF EXISTING GRADING IS FOUND NOT TO MEET CODE REQUIREMENTS. IN GENERAL:
   A. MAXIMUM CROSS SLOPE OF ANY PAVEMENT PERPENDICULAR TO DIRECTION OF TRAVEL IS 2.0%.
   B. MAXIMUM SLOPE OF WALKWAYS IN DIRECTION OF TRAVEL IS 5.0%.
   C. FOR RAMPS, THE MAXIMUM SLOPE IS 8.33% AND MAXIMUM RISE BETWEEN LANDINGS IS 30 INCHES, HANDRAILS ARE REQUIRED EACH SIDE OF ALL RAMPS WITH SLOPE GREATER THAN 5%.
   D. MAXIMUM SLOPE OF CURB RAMPS AND WINGS OF CURB RAMPS IS 8.33%. THE MAXIMUM LENGTH OF A CURB RAMP IS 6 FEET.
   E. PROVIDE FINISH PAVEMENT SURFACE TEXTURES IN ACCORDANCE WITH ADA.
   F. STRAIGHT GRADE FINISH PAVEMENT AND TOP OF CURB ELEVATIONS BETWEEN GIVEN ELEVATION POINTS. BLEND FINISH GRADES AT GRADE BREAKS.
32. PAVEMENT MARKINGS ON AC PAVEMENT SHALL BE MPI #32 ALKYD PAINT. INSTALL PER MANUFACTURERS RECOMMENDATIONS. VERIFY PAINT LOCATIONS, COLORS AND STENCILS WITH ARCHITECT.
33. ADA STALL PAVEMENT STENCILS SHALL BE THERMOPLASTIC STENCIL INSTALLED PER MANUFACTURES RECOMMENDATIONS.

02.0 CLEARING AND GRUBBING

1. ALL CONSTRUCTION AND MATERIALS WITHIN THE PUBLIC RIGHT-OF-WAY SHALL CONFORM TO THESE PLANS AND THE APPLICABLE REQUIREMENTS OF CITY OF MOLALLA, STATE OF OREGON AND FEDERAL EROSION AND SEDIMENT CONTROL BEST MANAGEMENT PRACTICES.
2. NOTIFY ARCHITECT 2 BUSINESS DAYS BEFORE COMMENCING WORK.
3. CONTRACTOR SHALL REMOVE ALL TREES, SHRUBS, RUBBISH, AND MAN-MADE STRUCTURES INCLUDING BUT NOT LIMITED TO CONCRETE SLABS, WALLS, VAULTS, FOOTINGS, ASPHALTIC PAVED SURFACES, GRAVELED AREAS, SHED OR OTHER FREE-STANDING BUILDINGS (CONSTRUCTED OF WOOD, CONCRETE, METAL, ETC.) FOUNDATIONS, FENCES, RAILINGS, MACHINERY, ETC. WITHIN THE CLEARING LIMITS. THE ITEMS LISTED ABOVE SHALL BE DISPOSED OF OFF-SITE. IT SHALL BE THE CONTRACTORS RESPONSIBILITY TO CONFIRM THE NUMBER AND TYPE OF STRUCTURES TO BE REMOVED. CONTRACTOR SHALL OBTAIN ALL NECESSARY DEMOLITION AND WORK PERMITS.
4. ALL BURIED STRUCTURES (I.E. TANKS, LEACH LINES, DRAIN TILE, AND PIPES) NOT DESIGNATED TO REMAIN ON THE SITE, SHALL BE REMOVED AND THE RESULTING EXCAVATIONS SHALL BE PROPERLY INSPECTED, BACKFILLED AND COMPACTED PRIOR TO ANY GRADING OR FILLING OPERATIONS. THIS IS TO INCLUDE STUMPS AND ROOTBALLS OF TREES TO BE REMOVED FROM THE SITE. NOTIFY CITY FOR INSPECTIONS AS REQUIRED.
5. THE AREA OF THE SITE DESIGNATED ON THE PLAN TO BE REGRADED OR PAVED SHALL BE STRIPPED TO REMOVE ALL ORGANIC MATERIAL DOWN TO FIRM SUBGRADE.THE CONTRACTOR SHALL BE RESPONSIBLE FOR PROTECTING SUBGRADE SOILS FROM OVERWORKING AND PROVIDE REPAIR TO DAMAGED SUBGRADE AT NO ADDITIONAL COST TO THE OWNER.
6. ALL UNSUITABLE MATERIAL (SOIL AND VEGETATION) REMOVED DURING THE CLEARING AND GRUBBING OPERATIONS SHALL BE REMOVED BY THE CONTRACTOR AND LEGALLY DISPOSED OF IN A SUITABLE LOCATION.
7. EXCAVATORS MUST COMPLY WITH ALL PROVISIONS OF ORS 757.541 TO 757.571 INCLUDING NOTIFICATION OF ALL OWNERS OF UNDERGROUND FACILITIES AT USA LOCATES (681-7044), AT LEAST 48 BUSINESS HOURS, BUT NOT MORE THAN 10 BUSINESS DAYS BEFORE COMMENCING AN EXCAVATION.
8. ALL EMBANKMENTS REQUIRED SHALL BE STRUCTURAL FILL MEETING THE REQUIREMENTS AND SPECIFICATIONS OF IBC CHAPTER 18.
9. ALL EXCESS MATERIAL NOT UTILIZED ON-SITE SHALL BE LEGALLY DISPOSED OF BY THE CONTRACTOR.
10. TREES NOT DESIGNATED TO BE REMOVED BY THE ARCHITECT SHALL BE PROTECTED AT ALL TIMES.
11. SAWCUT STRAIGHT LINES TO MATCH EXISTING PAVEMENT WITH THE NEW PAVEMENT.
12. CONTRACTOR SHALL PROVIDE AND MAINTAIN ADEQUATE TRAFFIC CONTROL ALONG THE EXISTING ROADS AS REQUIRED BY THE CITY OF MOLALLA

03.0 PRIVATE UTILITIES

1. CONTRACTOR TO PROVIDE UTILITY SUBMITTALS FOR REVIEW PRIOR TO INSTALLATION OF ALL PROPOSED UTILITY PIPES, CONDUITS, MANHOLES, BENDS/FITTINGS AND ALL OTHER SYSTEM APPURTENANCES.
2. SANITARY SEWER, STORM DRAIN AND WATER LINES IN PRIVATE PROPERTY SHALL BE PRIVATELY OWNED, MAINTAINED AND OPERATED. PROVIDE TRACER WIRE AND WARNING TAPE FOR ALL PLASTIC UTILITY LINES.
3. ALL PRIVATE CATCH BASINS, AREA DRAINS, STORM DRAIN PIPE, SANITARY SEWER PIPE AND WATER PIPE AND APPURTENANCES SHALL MEET THE REQUIREMENTS OF THE LATEST INTERNATIONAL PLUMBING CODE AS APPLICABLE.
4. ALL CONNECTIONS TO EXISTING PUBLIC STORM SEWER, SANITARY SEWER AND WATER MAINS REQUIRE ISSUANCE OF A PUBLIC WORKS PERMIT AND INSPECTION BY THE CITY OF MOLALLA AND THE WATER DISTRICT AS APPLICABLE.
5. PRIVATE SANITARY SEWER LATERALS SHALL COMPLY WITH THE REFERENCED PUBLIC STANDARDS AND DRAWINGS FOR PUBLIC SANITARY SEWER. LAY THE 'T' AT A 2% SLOPE.
6. CAST IRON SANITARY OR STORM DRAIN PIPE AND JOINTS SHALL BE HUBLESS, SERVICE WEIGHT, AND MEET THE REQUIREMENTS OF CISPI 301. JOINTS SHALL BE MECHANICAL CLAMP RING TYPE, STAINLESS STEEL EXPANDING AND CONTRACTING SLEEVES WITH FULL CIRCLE NEOPRENE RIBBED GASKETS FOR POSITIVE SEAL. COUPLINGS AND SHIELDS TO BEAR THE MANUFACTURER'S REGISTERED INSIGNIA. INSTALL IN ACCORDANCE WITH MANUFACTURER'S RECOMMENDATION.
7. PVC SANITARY SEWER OR STORM DRAIN PIPE SHALL BE ASTM D3034, SDR-35. COMPATIBLE ASTM D3034 FITTINGS MUST BE USED WITH ASTM D3034 PIPE. ALL ASTM D3034 PIPE USED MUST BE OF WATER-TIGHT JOINTS AND TESTED FOR ROUNDNESS AFTER BACKFILL. PROVIDE PRESSURE TEST. PROVIDE TV VIDEO TAPE IF SO REQUIRED BY THE JURISDICTION HAVING AUTHORITY.
8. HIGH DENSITY POLYETHYLENE (HDPE) STORM DRAIN PIPE AND ASSOCIATED HDPE FITTINGS SHALL MEET THE REQUIREMENTS OF ASTM D 3350 OR ASTM 1248, TYPE III, CLASS C, CATEGORY 4, GRADE P33. 4 INCH TO 10 INCH PIPE SHALL MEET AASHTO M252 TYPE S; 12 INCH TO 36 INCH PIPE SHALL MEET AASHTO M294 TYPE S; 42 INCH TO 48 INCH SHALL MEET AASHTO MP6-95, TYPE S; AND 54 INCH TO 60 INCH SHALL MEET AASHTO M294, TYPE S. JOINTS SHALL BE BELL AND SPIGOT COUPLINGS, OR EQUIVALENT, AND CONFORM TO ASTM D3212. INSTALLATION SHALL BE IN ACCORDANCE WITH ASTM D2321 WITH EXCEPTION THAT MINIMUM COVER IN TRAFFIC AREAS SHALL BE 18 INCHES.
9. ABS SCHEDULE 40 SOLID WALL PLASTIC PIPE AND FITTINGS MEETING REQUIREMENTS OF ASTM D 2661 JOINED WITH PIPE CEMENT MEETING REQUIREMENTS OF ASTM 2235.
10. DUCTILE IRON PIPE: AWWA C-151, CLASS 52, WITH GASKETED BELL & SPIGOT JOINTS, SEAL COATED PER AWWA C-104.
11. BURIED EXTERIOR PERFORATED FOUNDATION DRAIN PIPE WITH CONTINUOUS FILTER FABRIC SOCK SHALL BE "ADS DRAINGUARD" OR PVC SCHED 40 PERFORATED PIPE WITH SOLVENT WELD JOINTS. INSTALL DRAIN PIPE AT 0.5% SLOPE UP FROM BOTTOM OF FOOTING IN EACH DIRECTION AROUND THE BLDG FROM THE BACKWATER VALVE(S) CONNECTION LOCATION(S) TO THE SITE STORM DRAINAGE SYSTEM. PROVIDE FILTER FABRIC WRAP AROUND A 24 INCH WIDE X 24 INCH HIGH (MIN.) CLEAN DRAIN ROCK BACKFILL SECTION AT PERIMETER OF BUILDING FOUNDATION. LAP FILTER FABRIC 12 INCHES OVER TOP OF DRAIN ROCK SECTION. TOP OF DRAIN ROCK TO BE 9 INCHES BELOW FINISH GRADE BESIDE BUILDING. SEE DWGS FOR TYPICAL FNDN DRAIN INSTALLATION DETAIL.
12. ABS OR PVC FOUNDATION DRAIN BACKWATER VALVES SHALL BE HORIZONTAL TYPE SIMILAR TO ASME A112.14.1, WITH REMOVABLE COVER AND SWING CHECK VALVE WITH GASKET. SEE DWGS FOR INSTALLATION DETAIL.
13. GEOCOMPOSITE DRAINAGE FABRIC SHALL BE "AQUADRAIN 15X, "MIRADRAIN 6200XL", OR ENGINEER PRE-APPROVED EQUAL.
14. AREA DRAINS IN LANDSCAPE AREAS SHALL BE 15"X15" TURF & LANDSCAPE AREA DRAINS MANUFACTURED BY THE 'LYNCH CO." WITH 4 INCH DIAMETER TRAPPED NO-HUB CONNECTION OUTLETS, EXTENSIONS AND GRATES WITH BARS AT 1 -1/4 INCH ON CENTER FOR COMPLETE ASSEMBLY.
15. EXTERIOR AREA DRAINS IN CONCRETE PAVEMENT AREAS SHALL BE "SMITH" FLOOR DRAINS WITH 12 INCH DIAMETER TOPS, DEEP BODY SEDIMENT BUCKETS, 4 INCH DIAMETER TRAPPED NO-HUB CONNECTION OUTLETS, EXTENSIONS AND GRATES FOR COMPLETE ASSEMBLY.
16. EXTERIOR CLEANOUTS IN WALKWAYS SHALL BE J.R. SMITH 4023-U WITH HEAVY DUTY NICKEL BRONZE TOP, TAPER HEAD, ABS PLUG AND TOP SECURED WITH VANDAL PROOF SCREWS, FLUSH AT FINISH GRADE.
17. ALL SEWER LINES SHALL BE LAID IN A STRAIGHT ALIGNMENT AND IN A UNIFORM GRADE BETWEEN MANHOLES, CLEANOUTS OR OTHER STRUCTURES.
18. DUCTILE IRON WATER PIPE SHALL BE AWWA C-151, CLASS 52 WITH CEMENT MORTAR LINING AND SEAL COATED PER AWWA C-104. FITTINGS SHALL BE PER AWWA C-110 AND GASKETS PER AWWA C-111; JOINT RESTRAINING DEVICES PER EBAA IRON, INC.
19. PVC WATER PIPE (3/4" TO 2-1/2" DIAMETER) SHALL CONFORM WITH ASTM D2241, 160 PSI PIPE. JOINTS SHALL BE SOLVENT CEMENT WELDED CONFORMING WITH ASTM D2672 OR ASTM 03036. SOLVENT CEMENT SHALL CONFORM TO ASTM D 2564.
20. COPPER WATER PIPE (3/4 INCH TO 2-1/2 INCH DIAMETER) SHALL BE TYPE 'K' HARD TEMPERED COPPER PER ANSI H23.1 WITH WROUGHT COPPER SOLDER JOINT FITTINGS PER ANSI B16.22.
21. INSTALL ALL PLASTIC PIPE AND FITTINGS IN ACCORDANCE WITH ASTM D2321.
22. PROVIDE A DOUBLE CHECK VALVE ASSEMBLY IN AN ACCESSIBLE ROOM, CONCRETE BOX OR VAULT WITH OPENABLE LID(S) FOR ALL WATER SERVICE LINES 1 INCH AND LARGER. PROVIDE DETECTOR CHECK PLUMBING AND METER AT DOUBLE CHECK ASSEMBLIES FOR FIRE SERVICE LINES.
23. PROVIDE A PRESSURE REDUCING VALVE ASSEMBLY (INCLUDING GATE VALVES IMMEDIATELY UP AND DOWNSTREAM) IN AN ACCESSIBLE ROOM, CONCRETE BOX OR VAULT WITH OPENABLE LID(S) FOR ALL WATER SERVICE LINES WHERE MAXIMUM STATIC PRESSURE IS OR EXCEEDS EIGHTY (80) PSI. VALVES SHALL BE SET TO SUSTAIN A MAXIMUM PRESSURE OF 60 PSI AND SHALL BE OF A PRESSURE RATING TO ACCOMMODATE THE UPSTREAM PRESSURE INCLUDING AN ALLOWANCE OF 100 PSI FOR SURGE. VALVE SHALL BE CLAYTON 90-01 SERIES AS MANUFACTURED BY CAL-VAL CO., NEWPORT BEACH, CA OR WATER DISTRICT PRE-APPROVED.
24. ALL ELBOWS, BENDS, TEES, CROSSES AND DEAD ENDS ON WATER PIPES 3 INCHES AND LARGER IN SIZE SHALL BE PROVIDED WITH CONCRETE THRUST BLOCKS.
25. A MINIMUM DEPTH OF 30 INCHES IN PRIVATE LANDSCAPE AREAS AND 36 INCHES IN PRIVATE STREETS FROM FINISHED GRADE TO THE TOP OF WATER PIPE IS REQUIRED.
26. BLOW-OFF ASSEMBLIES ARE REQUIRED AT ALL DEAD-END PRIVATE WATER LINES.
27. ALL PRIVATE WATER LINES SHALL BE FLUSHED, PRESSURE TESTED AND DISINFECTED PER AWWA C600, SECTION 4 AND AWWA C601.
28. ALL WATER LINE CROSSINGS WITH SANITARY SEWER SHALL COMPLY WITH APPLICABLE DEQ AND OREGON STATE HEALTH DIVISION RULES AND REGULATIONS RELATING TO VERTICAL AND HORIZONTAL SEPARATION.
29. ALL NEW AND EXISTING MANHOLE RIMS, CATCH BASIN RIMS, CLEAN-OUTS AND OTHER INCIDENTAL STRUCTURES SHALL BE LOCATED AND ADJUSTED TO FINISH GRADE OR AS OTHERWISE INDICATED ON THE DRAWINGS.
30. PRECAST CONCRETE UTILITY VAULTS:
   A. REINFORCED PRECAST CONCRETE UTILITY VAULTS SHALL BE APPROVED BY THE OREGON STATE PLUMBING BOARD. PROVIDE COMPLETE ASSEMBLIES FOR INSTALLATION INCLUDING INLET AND OUTLET PIPING.
   B. GRADE RINGS: PROVIDE MANUFACTURER'S STANDARD PRECAST CONCRETE GRADE RINGS FOR ADJUSTING VAULT LIDS TO FINISH GRADE.
   C. MINIMUM STRUCTURAL REQUIREMENTS:
      I. CONCRETE: 28 DAY COMPRESSIVE STRENGTH FC = 4500 PSI
      II. REBAR: ASTM A-615 GRADE 60.
      III. MESH: ASTM A185 GRADE 65.
      IV. STEEL: ASTM A36 GRADE 36.
      V. GALVANIZING: ASTM A-123-89 AND A-153-87 (HOT DIPPED).
      VI. STEEL DESIGN: AISC MANUAL OF STEEL CONSTRUCTION, 9Th EDITION.
      VII. CONCRETE DESIGN: ACI-318-89 BUILDING CODE.
   - ASTM C-857 MINIMUM STRUCTURAL DESIGN.
   - LOADING FOR UNDERGROUND PRECAST CONCRETE UTILITY STRUCTURES.
      VIII. LOADS: AASHTO H-20 16 KIP WHEEL LOAD WITH 30% IMPACT (10"X20" FOOTPRINT)
   - AASHTO LIVE LOAD SURCHARGE (2' SOIL) 8' DEPTH
   - EFFECTIVE SOIL PRESSURE ABOVE WATER TABLE - 80 P.C.F.
   - EFFECTIVE SOIL PRESSURE ABOVE WATER TABLE - 45 P.C.F.
      IX. SOIL COVER: 1'-6" MINIMUM WITH WATER TABLE 3'-0" BELOW FINISHED GRADE.
   - 5'0" MAXIMUM WITH WATER TABLE 3'-0" BELOW FINISHED GRADE
   - 0' MINIMUM WITH WATER TABLE BELOW BOTTOM OF VAULT.
   - 5'-0" MAXIMUM WITH WATER TABLE BELOW BOTTOM OF VAULT.
   D. ACCEPTABLE MANUFACTURERS:
      I. UTILITY VAULT COMPANY, WILSONVILLE, OREGON
      II. ENGINEER PRE-APPROVED EQUAL MEETING SAME OR BETTER REQUIREMENTS.

12.0 CONSTRUCTION OBSERVATION, INSPECTION AND TESTING

12.1 GENERAL

1. INDEPENDENT TESTING LAB TO BE RETAINED BY OWNER TO PROVIDE INSPECTIONS AND SPECIAL INSPECTIONS AS DESCRIBED HEREIN.
2. CONTRACTOR IS RESPONSIBLE TO COORDINATE AND PROVIDE ON SITE ACCESS TO ALL REQUIRED INSPECTIONS AND NOTIFY GEOTECHNICAL ENGINEER AND TESTING LABS IN TIME TO MAKE SUCH INSPECTIONS AND ALL NECESSARY REINSPECTIONS.
3. CONTRACTOR: DO NOT COVER WORK REQUIRED TO BE INSPECTED OR REINSPECTED PRIOR TO INSPECTION BEING MADE. IF WORK IS COVERED, UNCOVER AS NECESSARY.
4. INSPECTORS SHALL PROMPTLY NOTIFY THE CONTRACTOR PRIOR TO LEAVING THE SITE AND OWNER'S REPRESENTATIVE OF SUBSTANDARD WORK AND PROVIDE A COPY OF ALL REPORTS TO THE OWNER, ARCHITECT, ENGINEER, CONTRACTOR, AND BUILDING OFFICIAL.
5. CONTRACTOR TO NOTIFY CIVIL ENGINEER WHEN UTILITY WORK BEGINS AND FOR OBSERVATION OF BASE ROCK PRIOR TO PLACING FINISH CURBS OR PAVEMENTS.

12.2 SPECIAL INSPECTIONS

1. REQUIRED SPECIAL INSPECTIONS SHALL BE PERFORMED BY AN INDEPENDENT SPECIAL INSPECTOR PER SECTION 1701 OF THE INTERNATIONAL BUILDING CODE (IBC) FOR THE FOLLOWING:
   A. SOILS:
      I. FOUNDATION EXCAVATION TO BE OBSERVED BY OWNER'S GEOTECHNICAL ENGINEER FOR FIELD VERIFYING FOUNDATION DRAINAGE AND DEWATERING RECOMMENDATIONS.
      II. NATIVE SUBGRADE SURFACE TO BE PROOF-ROLLED AND OBSERVED BY THE OWNER'S GEOTECHNICAL ENGINEER OR HIS REPRESENTATIVE PRIOR TO PLACEMENT OF ALL FILL OR BASE ROCK MATERIALS UNDER OR WITHIN 5 FEET OF ALL PAVEMENT AND BUILDING AREAS. DURING WET WEATHER CONSTRUCTION WHEN PROOF-ROLL OF NATIVE SUBGRADE MAY NOT BE APPROPRIATE (AS DETERMINED BY GEOTECHNICAL ENGINEER), PROVIDE PROOF-ROLL OF ALL BASE ROCK SURFACES PRIOR TO PLACEMENT OF ANY FINISH PAVEMENTS.
      III. DURING THE PLACEMENT OF ALL FILL, INCLUDING TRENCH BACKFILL AND BASE BELOW PAVEMENTS AND BUILDINGS, GEOTECHNICAL ENGINEER OR HIS REPRESENTATIVE TO VERIFY THAT MINIMUM COMPACTION REQUIREMENTS ARE MET. PROVIDE TEST FOR EACH 40 CUBIC YARDS PLACED.
      IV. GEOTECHNICAL ENGINEER OR HIS REPRESENTATIVE TO OBSERVE ALL PROOF ROLLS.

   CONTACT:CARLSON TESTING
   PO BOX 23814
   TIGARD, OREGON 97281
   (503) 684-3460

   B. PAVEMENTS:
      I. VERIFY COMPACTION OF ASPHALT PAVEMENTS.
      II. VERIFY ULTIMATE STRENGTH, REINFORCEMENT SIZE, PLACEMENT AND GRADE OF CONCRETE PAVEMENTS.
   C. STORM DRAIN AND SANITARY PIPE:
      I. CONTRACTOR TO PROVIDE HYDROSTATIC OR AIR TESTING OF ALL PIPES, JOINTS, MANHOLES, ETC. AS REQUIRED BY LOCAL AND STATE JURISDICTIONS.
      II. OBSERVE DEFLECTION TEST PERFORMED BY CONTRACTOR FOR ALL FLEXIBLE STORM AND SANITARY PIPE. DEFLECTION TEST TO BE IN ACCORDANCE WITH OREGON CHAPTER APWA 303.9.

CIVIL ABBREVIATIONS

ABBR	ABBREVIATION	H.P.	HIGH POINT
AC	ASPHALT CONCRETE	HT	HEIGHT
AD	AREA DRAIN	IE	INVERT ELEVATION
ADA	AMERICANS WITH DISABILITIES ACT	INFO	INFORMATION
ALT	ALTERNATE	INT	INTERIOR
APPX	APPROXIMATELY	JT	JOINT
ARCH	ARCHITECTURAL	L	LENGTH
ARV	AIR RELIEF VALVE	LBS	POUNDS
BCR	BEGIN CURB RETURN	LF	LINEAR FEET
BF	BACKFLOW	LIN	LINEAR
BLDG	BUILDING	LT	LEFT
BOT	BOTTOM	MANUF	MANUFACTURER
BOW	BOTTOM OF WALL	MAX	MAXIMUM
BS	BACK OF SIDEWALK	MECH	MECHANICAL
BTWN	BETWEEN	M.E.P.	MECHANICAL, ELECTRICAL & PLUMBING
BPZ	BACK OF PEDESTRIAN ZONE	M.J.	MECHANICAL JOINT
B-W-V	BACKWATER VALVE	MH	MANHOLE
CB	CATCH BASIN	MIN	MINIMUM
C.I.	CAST IRON	N	NEW
CJ	CONTROL JOINT	N.S.	NON SHRINK
CL or C/L	CENTER LINE	N.T.S.	NOT TO SCALE
CLR	CLEAR	O.C.	ON CENTER
CO	CLEANOUT	O.W.S.	OIL WATER SEPARATOR
CONC	CONCRETE	PL or P/L	PROPERTY LINE
CONT	CONTINUOUS	P.C.	POINT OF CURVATURE
COP	CITY OF PORTLAND	P.C.C.	POINT OF COUNTER CURVATURE
CRWN	CROWN (OF ROADWAY)	PERF	PERFORATED
CULV	CULVERT	PLYWD	PLYWOOD
DBL	DOUBLE	P.P.	PRIMARY POWER/POWER POLE
DC	DOUBLE CHECK	PROP	PROPOSED
DCDA	DOUBLE CHECK DETECTOR ASSEMBLY	PSF	POUNDS-PER-SQUARE-FOOT
DET	DETAIL	P.T.	POINT OF TANGENCY
D.I.	DUCTILE IRON	PVC	POLYVINYL-CHLORIDE
DIA or Ø	DIAMETER	P.U.E.	PUBLIC UTILITY EASEMENT
DIM	DIMENSION	P.W.	PUBLIC WORKS
DOM	DOMESTIC	R or RAD	RADIUS
DWG	DRAWING	R.D.	ROOF DRAIN
DS	DOWNSPOUT	REINF	REINFORCEMENT/REINFORCING
DW	DRY WELL	REQ'D	REQUIRED
D/W	DRIVEWAY	REHAB	REHABILITATION
EA	EACH	R.P.	RADIUS POINT
EG	EXISTING GRADE	RT	RIGHT
EJ	EXPANSION JOINT	R/W or ROW	RIGHT-OF-WAY
EL or ELEV	ELEVATION	S	SLOPE
ELEC	ELECTRIC	SAN or S.S.	SANITARY SEWER
EMBED	EMBEDMENT	SCHED	SCHEDULE
EOP	EDGE OF PAVEMENT	SED	SEDIMENTATION
E.O.R.	ENGINEER OF RECORD	SHT	SHEET
EQ	EQUAL	SIM	SIMILAR
ER	END RETURN	SPECS	SPECIFICATIONS
ESC	EROSION AND SEDIMENT CONTROL	SQ	SQUARE
EW	EACH WAY	STA	STATION
EX or EXIST	EXISTING	STD	STANDARD
EXT	EXTERIOR	STM	STORM SEWER
FDC	FIRE DEPARTMENT CONNECTION	STIFF	STIFFENER
FNDN	FOUNDATION	STL	STEEL
FF	FINISH FLOOR	STRUCT	STRUCTURAL
FG	FINISH GRADE	SW	SIDEWALK
FH	FIRE HYDRANT	TC	TOP OF CURB
FIN	FINISH	TELE	TELEPHONE
FL	FLOW LINE	T.O.F.	TOP OF FOOTING
FLG	FLANGE	T.O.S.	TOP OF SLAB
FLR	FLOOR	T.O.W.	TOP OF WALL
FP	FINISH PAVEMENT	TYP	TYPICAL
FPZ	FACE OF PEDESTRIAN ZONE	U.E.	UNDERGROUND ELECTRICAL
FC	FACE OF CURB	U.O.N.	UNLESS OTHERWISE NOTED
FTG	FOOTING	U.P.	UNDERGROUND POWER
GA	GAGE or GAUGE	U.R.M.	UNREINFORCED MASONRY
GALV	GALVANIZED	U.T.	UNDERGROUND TELEPHONE
GB	GRADE BREAK	V.B.	VALVE BOX
GEN	GENERAL	VERT	VERTICAL
GR	GROUND	WTR	WATER
GS	GROUND SHOT	W.J.	WET JOINT
GSP	GALVANIZED STEEL PIPE	W.M.	WATER METER
GUT	GUTTER	W.Q.	WATER QUALITY
G.V.	GATE VALVE	WV	WATER VALVE
HDPE	HIGH-DENSITY-POLYETHYLENE	W/	WITH
HORIZ	HORIZONTAL	W/O	WITHOUT

EXISTING CONDITIONS LEGEND

EXISTING BUSH/SHRUB	EXISTING SANITARY MANHOLE
EXISTING DECIDUOUS TREE	XSAN EXISTING SANITARY LINE
EXISTING CONIFEROUS TREE	XG EXISTING GAS LINE
EXISTING POWER POLE	X EXISTING FENCE
XOH EXISTING OVERHEAD ELECTRICAL LINE	FOUND MONUMENTS
XE EXISTING UNDERGROUND ELECTRICAL LINE	LOCAL BENCHMARK ESTABLISHED
EXISTING FIRE HYDRANT	EXISTING GRAVEL
EXISTING VAULT	EXISTING CONCRETE
EXISTING WATER METER	EXISTING ASPHALT
EXISTING WATER VALVE	EXISTING WETLAND
XWTR EXISTING WATER LINE	100 EXISTING MAJOR CONTOUR
EXISTING STORM CATCH BASIN	99 EXISTING MINOR CONTOUR
XSTM EXISTING STORM LINE	

PROPOSED LEGEND

- CONCRETE SIDEWALK & SCORING
- TREE PROTECTION FENCE
- TREE REMOVAL
- ORANGE CONSTRUCTION FENCE
- SEDIMENT CONTROL WATTLES
- CURB & GUTTER
- SAN — SANITARY SEWER PIPE
- SANITARY SEWER MANHOLE
- SANITARY SEWER CLEANOUT
- STM — STORM PIPE
- STORM CATCH BASIN
- STORM MANHOLE
- STORM CLEANOUT
- WTR — WATER PIPE
- WATER BEND
- WATER VALVE
- WM — WATER METER
- FIRE HYDRANT
- G — GAS LINE
- GAS METER
- OH — OVERHEAD ELECTRICAL LINE
- E — UNDERGROUND ELECTRICAL LINE
- POWER POLE
- STREET LIGHT
- SIGNS

CIVIL SHEET LIST

PAGE NO.	SHEET NO.	SHEET TITLE
1	C1.0	NOTES & ABBREVIATIONS
2	C1.1	EXISTING CONDITIONS
3	C2.1	UTILITY PLAN
4	C2.2	UPPER GRADING PLAN
5	C2.3	LOWER GRADING PLAN
6	C3.0	CIVIL DETAILS
7	C3.1	CIVIL DETAILS
8	C4.0	JURISDICTIONAL DETAILS

MILDREN DESIGN GROUP
ARCHITECTURE | INTERIORS
4875 SW Griffith Drive Suite 300
Beaverton OR, 97005
(503) 244-0552

PRELIMINARY NOT FOR CONSTRUCTION 08/09/22
REGISTERED PROFESSIONAL ENGINEER 86493PE OREGON KARI NALANI KUBOYAMA
RENEWS: 6-30-2023

WDY Structural · Civil Engineers
6443 SW Beaverton-Hillsdale Hwy, suite 210 Portland, OR 97221
ph:503.203.8111 fx:503.203.8122 www.wdyi.com

Client/ Owner:
ALTABIRD INVESTMENTS

Project:
ALTABIRD INVESTMENTS CORNELIUS

TENTH AVENUE INDUSTRIAL CENTER
Lot:13-16, CORNELIUS OR, 97113

Sheet Title:
NOTES & ABBREVIATIONS

Revisions:

#	Description	Date

MILDREN DESIGN GROUP, P.C., 2022, ALL RIGHTS RESERVED ©

THESE DRAWINGS ARE THE PROPERTY OF MILDREN DESIGN GROUP, P.C., AND ARE NOT TO BE USED OR REPRODUCED IN ANY MANNER, EXCEPT WITH THE PRIOR WRITTEN PERMISSION OF MILDREN DESIGN GROUP, P.C.

Date: 2022-04-26
Drawn by: JR
Checked by: KK
Job Number: 122013
Sheet
C1.0

DRAFT DESIGN

FILE: 22120_C1.0.DWG C1.0 8/9/2022 10:54:24 AM — KUBOYAMA

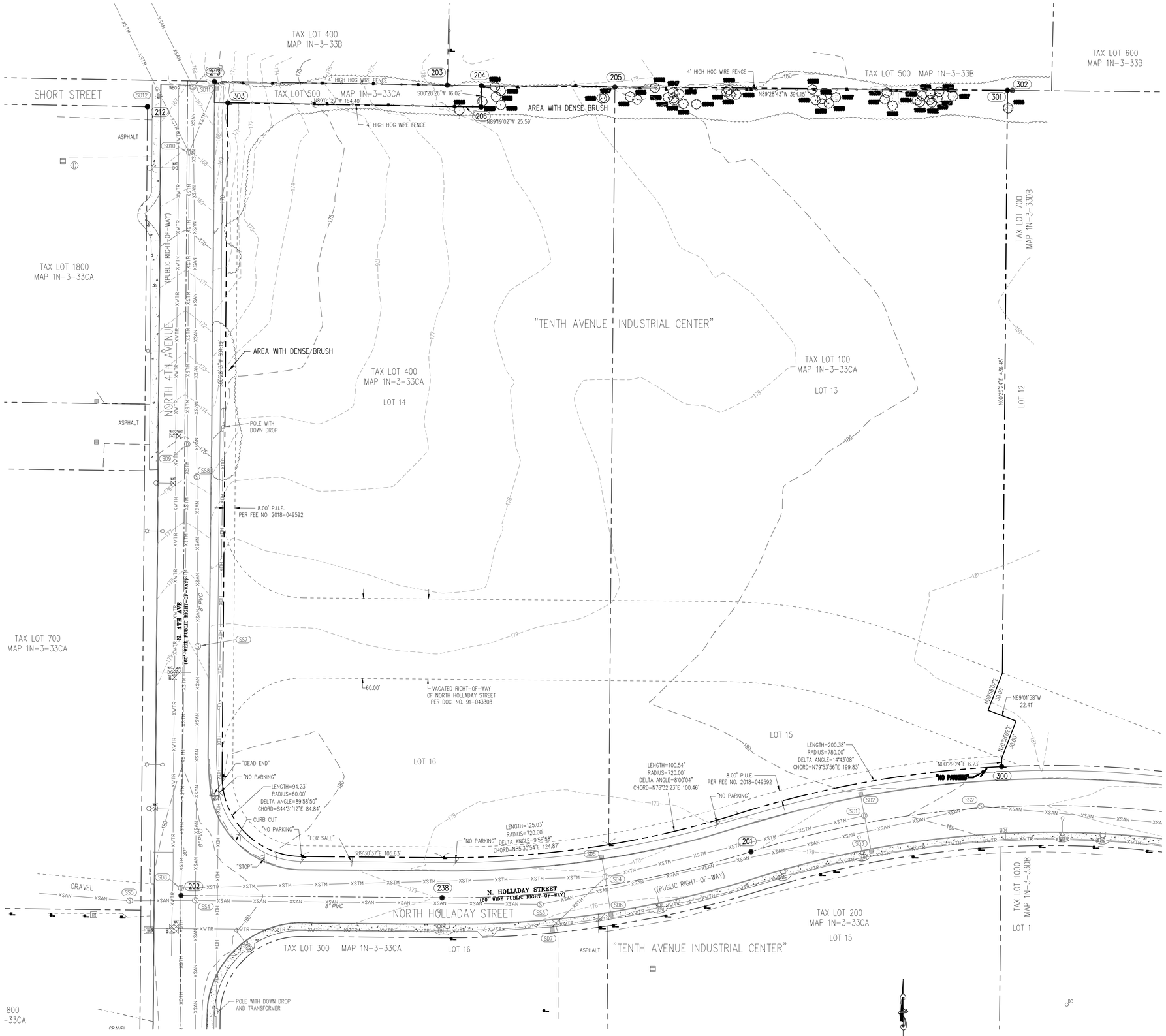

LEGEND

DECIDUOUS TREE	GUY WIRE ANCHOR
FIRE HYDRANT	UTILITY POLE
WATER METER	POWER JUNCTION BOX
WATER VALVE	STREET LIGHT
WATER BLOWOFF VALVE	SIGN
SANITARY SEWER MANHOLE	MAILBOX
STORM SEWER CURB INLET	FOUND SURVEY MONUMENT
STORM SEWER MANHOLE	

RIGHT-OF-WAY LINE
BOUNDARY LINE
PROPERTY LINE
CENTERLINE
CURB
EDGE OF PAVEMENT
EASEMENT
FENCE LINE
GRAVEL EDGE
OVERHEAD WIRE — OHW —
STORM SEWER LINE — XSTM —
SANITARY SEWER LINE — SAN —
WATER LINE — WAT —

TREE INFORMATION

15316	SPLIT 2-11" DECIDUOUS
15317	30" DECIDUOUS CLUSTER
15318	6" DECIDUOUS
15319	6" DECIDUOUS
15320	7" DECIDUOUS
15321	6" DECIDUOUS
15322	9" DECIDUOUS
15323	21" DECIDUOUS
15324	6" DECIDUOUS
15325	6" DECIDUOUS
15326	7" DECIDUOUS
15327	SPLIT 4" & 7" DECIDUOUS
15330	8" DECIDUOUS
15332	12" DECIDUOUS
15333	SPLIT 4" & 7" DECIDUOUS
15335	SPLIT 5" & 8" DECIDUOUS
15336	8" DECIDUOUS
15337	SPLIT 2-3" & 8" DECIDUOUS
15338	SPLIT 3", 5" & 6" DECIDUOUS
15339	SPLIT 6" & 14" DECIDUOUS
15340	8" DECIDUOUS
15341	7" DECIDUOUS
15343	SPLIT 3" & 6" DECIDUOUS
15345	SPLIT 2-6" & 7" DECIDUOUS
15346	10" DECIDUOUS
15347	SPLIT 4" & 7" DECIDUOUS
15348	6" DECIDUOUS
15349	9" DECIDUOUS
15350	9" DECIDUOUS
15352	24" DECIDUOUS
15515	SPLIT 6" & 9" DECIDUOUS
15516	9" DECIDUOUS
15517	SPLIT 4", 6" & 7" DECIDUOUS
15518	SPLIT 3" & 2-6" DECIDUOUS
15519	SPLIT 5", 3-6" & 8" DECIDUOUS
15520	6" DECIDUOUS
15521	7" DECIDUOUS
15523	14" DECIDUOUS
15524	SPLIT 6" & 7" DECIDUOUS
15525	9" DECIDUOUS

SANITARY SEWER INFORMATION

SS1 MANHOLE
RIM = 181.11'
8" IE IN (N) = 168.7'
8" IE IN (S) = 168.5'
8" IE IN (SE) = 168.2'
8" IE OUT (W) = 168.2'

SS2 MANHOLE
RIM = 180.55'
8" IE IN (E) = 167.4'
8" IE OUT (SW) = 167.3'

SS3 MANHOLE
RIM = 178.30'
8" IE IN (NE) = 165.8'
8" IE IN (S) = 165.9'
8" IE OUT (W) = 165.7'

SS4 MANHOLE
RIM = 180.38'
8" I.E. IN (S) = 164.8'
8" I.E. IN (W) = 164.8'
8" I.E. IN (E) = 164.7'
8" I.E. OUT (N) = 164.7'

SS5 MANHOLE
RIM = 180.21'
8" I.E. IN (W) = 165.3'
8" I.E. OUT (E) = 165.1'

SS6 MANHOLE
RIM = 180.13'
6" I.E. IN (W) = 169.4'
6" I.E. IN (W) = 172.2'
8" I.E. IN (S) = 165.3'
8" I.E. OUT (N) = 165.2'

SS7 MANHOLE
RIM = 178.92'
8" I.E. IN (S) = 163.6'
8" I.E. IN (W) = 163.2'
8" I.E. IN (E) = 163.2'
8" I.E. OUT (N) = 162.9'

SS8 MANHOLE
RIM = 175.81'
8" I.E. IN (S) = 162.2'
8" I.E. OUT (N) = 162.0'

SS9 MANHOLE
RIM = 166.90'
8" IE IN (S) = 159.6'
8" IE IN (SW) = 163.3'
12" IE IN (E) = 160.1'
8" IE OUT (NW) = 159.3'

STORM SEWER INFORMATION

SD1 MANHOLE
RIM = 179.54'
10" IE IN (N) = 173.7'
12" IE IN (E) = 173.7'
10" IE IN (S) = 173.7'
12" IE OUT (W) = 173.6'

SD2 CURB INLET
RIM/TOP CURB = 179.71'
10" IE OUT (SE) = 175.8'

SD3 CURB INLET
RIM/TOP CURB = 179.71'
10" IE OUT (NW) = 175.9'

SD4 MANHOLE
RIM = 178.12'
10" IE IN (NW) = 172.2'
8" IE IN (N) = 172.2'
12" IE IN (NE) = 172.1'
8" IE IN (SE) = 172.0'
10" IE IN (S) = 171.8'
24" IE OUT (W) = 171.7'

SD5 CURB INLET
RIM/TOP CURB = 178.29'
10" IE OUT (SE) = 174.7'
SUMP = 174.2'

SD6 CATCH BASIN
T.O.G = 178.29'
10" IE OUT (NW) = 174.3'
SUMP = 173.7'

SD7 DITCH INLET
LOW PT T.O.G. = 177.21'
8" IE OUT (E) = 175.6'
SUMP = 173.7'

SD8 MANHOLE
RIM = 180.56'
24" I.E. IN (S) = 170.9'
18" I.E. IN (E) = 171.0'
18" I.E. IN (W) = 171.1'
30" I.E. OUT (N) = 170.9'

SD9 MANHOLE
RIM = 175.17'
30" I.E. IN (S) = 170.0'
30" I.E. OUT (N) = 166.8'

SD10 MANHOLE
RIM = 168.04'
30" IE IN (S) = 162.5'
12" IE IN (W) = 162.6'
12" IE IN (E) = 162.7'
12" IE IN (NE) = 162.8'
30" IE OUT (NW) = 162.5'

SD11 CURB INLET
RIM/TOP CURB = 166.83'
12" IE OUT (SW) = 163.3'
SUMP = 162.3'

SD12 CURB INLET
RIM/TOP CURB = 167.19'
10" IE OUT (E) = 163.6'
SUMP = 163.7'

NOTES

1) THE FIELD SURVEY FOR THIS MAP WAS COMPLETED ON JUNE 24, 2013.

2) ELEVATIONS AND CONTOURS ARE BASED ON WASHINGTON COUNTY GEODETIC CONTROL POINT 154. THE BENCHMARK IS A BRASS DISK LOCATED AT THE SOUTHEAST CORNER OF DLC 63. IT HAS AN ELEVATION OF 177.9 FEET ON THE NGVD 1929 DATUM.

3) THIS SURVEY WAS NOT INTENDED TO MAP UNDERGROUND UTILITIES WITH THE EXCEPTION OF STORM AND SANITARY SEWER LINES. NO UTILITY LOCATES WERE PROVIDED IN CONJUNCTION WITH THIS SURVEY.

4) THIS IS NOT A DESIGN GRADE SURVEY. IT SHOULD NOT BE USED FOR THE DESIGN OF ANY SITE IMPROVEMENTS. ONLY THE MAIN SITE IMPROVEMENTS HAVE BEEN MAPPED, SUCH AS BUILDINGS AND PAVEMENT AREAS.

UTILITY STATEMENT

THE UNDERGROUND UTILITIES SHOWN HAVE BEEN LOCATED FROM FIELD SURVEY INFORMATION AND EXISTING DRAWINGS. THE SURVEYOR MAKES NO GUARANTEE THAT THE UNDERGROUND UTILITIES SHOWN COMPRISE ALL SUCH UTILITIES IN THE AREA, EITHER IN SERVICE OR ABANDONED. THE SURVEYOR FURTHER DOES NOT WARRANT THAT THE UNDERGROUND UTILITIES SHOWN ARE IN THE EXACT LOCATION INDICATED ALTHOUGH HE DOES CERTIFY THAT THEY ARE LOCATED AS ACCURATELY AS POSSIBLE FROM INFORMATION AVAILABLE. THE SURVEYOR HAS NOT PHYSICALLY LOCATED THE UNDERGROUND UTILITIES.

GRAPHIC SCALE
30 0 15 30 60 120
(IN FEET)
1 inch = 30 feet

1 / C1.1 **EXISTING CONDITIONS**
SCALE: 1" = 30'-0"

DRAFT DESIGN

MILDREN DESIGN GROUP
ARCHITECTURE | INTERIORS
4875 SW Griffith Drive Suite 300
Beaverton OR, 97005
(503) 244-0552

FOR REFERENCE ONLY

WDY Structural Civil Engineers
6443 SW Beaverton-Hillsdale Hwy, suite 210 Portland, OR 97221
ph:503.203.8111 fx:503.203.8122 www.wdy.com

Client/ Owner:
ALTABIRD INVESTMENTS

Project:
ALTABIRD INVESTMENTS CORNELIUS

TENTH AVENUE INDUSTRIAL CENTER
Lot:13-16, CORNELIUS OR, 97113

Sheet Title:
EXISTING CONDITIONS

Revisions:

#	Description	Date

MILDREN DESIGN GROUP, P.C., 2022. ALL RIGHTS RESERVED ©.

THESE DRAWINGS ARE THE PROPERTY OF MILDREN DESIGN GROUP, P.C., AND ARE NOT TO BE USED OR REPRODUCED IN ANY MANNER, EXCEPT WITH THE PRIOR WRITTEN PERMISSION OF MILDREN DESIGN GROUP, P.C.

Date:	2022-04-26
Drawn by:	Checked by:
JR	KK
Job Number:	122013
Sheet	

C1.1

FILE: 22120_C1.1.DWG C1.1 8/9/2022 10:54:31 AM – KUBOYAMA

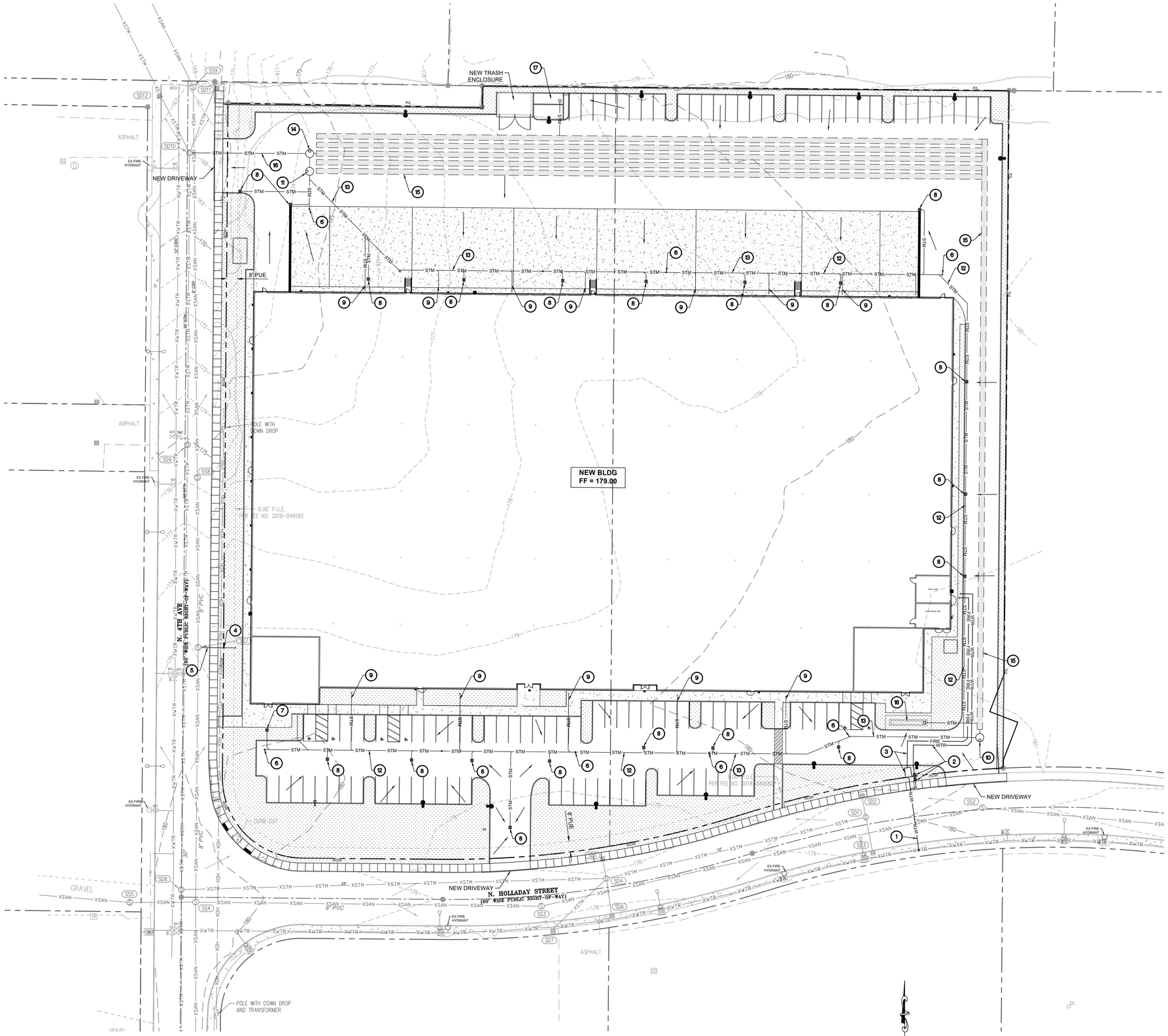

KEYNOTES FOR THIS SHEET

MARK	DESCRIPTION
1	TAP EXISTING WATER MAIN AND INSTALL NEW 4" D.I. CLASS 52 WATER SERVICE PIPE.
2	INSTALL NEW 2" WATER METER AND 2" DCVA W/ 2" DOMESTIC COPPER WATER SERVICE TO BLDG. SEE PLUMBING FOR CONTINUATION INTO BUILDING.
3	INSTALL NEW FIRE WATER SERVICE VAULT WITH 4" DOUBLE CHECK DETECTOR ASSEMBLY WITH FDC RISER ASSEMBLY, TAMPER SWITCHES, FIRE ALARM SWITCHES AND 1/3 H.P. SUMP PUMP WITH FLOAT SWITCH AND HIGH WATER ALARM. CONTRACTOR TO VERIFY AND CONFIRM VAULT MINIMUM SIZE FOR CONFIGURATION WITH FDC.
4	INSTALL NEW SANITARY C.O. WITHIN 1' OF PROPERTY LINE.
5	INSTALL NEW 6" DIA PVC ASTM D3034 SANITARY LINE AT 2% MIN SLOPE. CONNECT TO EXISTING STUB AT MANHOLE. VERIFY ELEVATION AT CONNECTION. SEE PLUMBING FOR CONTINUATION INTO BUILDING.
6	INSTALL TYP. CLEAN OUT ASSEMBLY.
7	INSTALL NEW LANDSCAPE AREA DRAIN. CONNECT TO SITE STORM WITH 4" DIA. ABS SCHED 40 SOLD WALL PIPE AT 1.0% MIN SLOPE. SEE GRADING PLAN FOR RIM ELEVATIONS, TYP.
8	INSTALL NEW CATCH BASIN, SEE GRADING PLAN FOR RIM ELEVATIONS, TYP.
9	NEW STORM FROM BUILDING ROOF DOWNSPOUTS. CONNECT TO SITE STORM WITH 4" DIA ABS AT 1.0% MIN SLOPE. COORDINATE WITH ARCH FOR EXACT LOCATIONS.
10	INSTALL NEW FILTERED MANHOLE FOR STORMWATER TREATMENT. PROVIDE 5, 27" HT CARTRIDGES, SEE DETAIL ON C3.1.
11	INSTALL NEW FILTERED MANHOLE FOR STORMWATER TREATMENT. PROVIDE 7, 27" HT CARTRIDGES, SEE DETAIL ON C3.1.
12	INSTALL 6" DIA. PVC ASTM D3034, SDR 35 STORM PIPE AT 1.0% MIN SLOPE.
13	INSTALL 8" DIA. PVC ASTM D3034, SDR 35 STORM PIPE AT 0.8% MIN SLOPE.
14	INSTALL NEW DETENTION CONTROL MANHOLE, SEE DETAIL 3/C3.1.
15	INSTALL 3,000 LF OF 48" DIA. DETENTION PIPE. BOTTOM OF PIPE = 163.75
16	INSTALL 85 LF OF 12" DIA. PVC ASTM D3034, SDR35 STM PIPE AT 1% SLOPE TO EXISTING MANHOLE. CONTRACTOR TO FIELD VERIFY EXISTING STUB, APPROX IE(12")=162.70 +/-
17	INSTALL 175 SF BOTTOM LIDA PLANTER. PARKING AREA TO SHED TO PLANTER VIA CURB CUTS. PROVIDE OVERFLOW TO DETENTION SYSTEM.
18	INSTALL 65 SF BOTTOM LIDA RAIN GARDEN WITH 3:1 SIDE SLOPES. DRIVE AISLE AREA TO SHED TO RAIN GARDEN VIA CURB CUTS. PROVIDE OVERFLOW TO DETENTION SYSTEM.

GRAPHIC SCALE

30 0 15 30 60 120

(IN FEET)
1 inch = 30 feet

1 / C2.1 **UTILITY PLAN**

SCALE: 1" = 30'-0"

DRAFT DESIGN

MILDREN DESIGN GROUP

ARCHITECTURE | INTERIORS

4875 SW Griffith Drive Suite 300
Beaverton OR, 97005
(503) 244-0552

REGISTERED PROFESSIONAL ENGINEER
KARI MILANI YOKOYAMA
08/09/22
PRELIMINARY NOT FOR CONSTRUCTION

RENEWS: 6-30-2023

WDY Structural Civil Engineers
6443 SW Beaverton-Hillsdale Hwy, suite 210 Portland, OR 97221
ph:503.203.8111 fx:503.203.8122 www.wdy.com

Client/ Owner:

ALTABIRD INVESTMENTS

Project:

ALTABIRD INVESTMENTS CORNELIUS

TENTH AVENUE INDUSTRIAL CENTER
Lot:13-16, CORNELIUS
OR, 97113

Sheet Title:

UTILITY PLAN

Revisions:

#	Description	Date

MILDREN DESIGN GROUP, P.C., 2022, ALL RIGHTS RESERVED ©

THESE DRAWINGS ARE THE PROPERTY OF MILDREN DESIGN GROUP, P.C., AND ARE NOT TO BE USED OR REPRODUCED IN ANY MANNER, EXCEPT WITH THE PRIOR WRITTEN PERMISSION OF MILDREN DESIGN GROUP, P.C.

Date:	2022-04-26
Drawn by:	Checked by:
JR	KK
Job Number:	122013
Sheet	C2.1

FILE: 22120_C2.1.DWG UTILITY PLAN 8/9/2022 10:54:38 AM – KUBOYAMA

GRADING NOTES:

1. CONTRACTOR IS RESPONSIBLE TO PERFORM CUT AND FILL EARTH WORK IN SUCH A MANNER TO PROTECT NATIVE SOILS FROM BEING OVER WORKED AND FROM BECOMING TOO SATURATED DURING WET WEATHER. DURING WET WEATHER PERFORM WORK IN AREAS SMALL ENOUGH TO CUT AND ROCK SITE AREAS UNDER PAVEMENT AND BUILDING TO PREVENT AREAS OF NATIVE SOIL BEING EXPOSED TO WET WEATHER. THIS SITE SHALL HAVE CEMENT DEEP SOIL MISSING COLUMNS DESIGNED, INSTALLED AND SHOWN BY OTHERS. COORDINATE SITE WORK AND ESC MEASURES ACCORDINGLY.
2. REFER TO ARCHITECTURAL SITE PLANS FOR ALL SITE LAYOUT DIMENSIONS INCLUDING WALKWAYS, BUILDING, AND RETAINING WALLS.
3. PROVIDE SEPARATE BID ADDITIVES IN SPEC SECTION 12.0 FOR WET WEATHER CONSTRUCTION OVER-EXCAVATION OF SUBGRADE AND REPLACEMENT WITH CRUSHED ROCK. PROVIDE FOR A 2 FOOT THICK OVER-EXCAVATION AND REPLACEMENT OF NATIVE SOIL UNDER THE BUILDING FOOTPRINT (EXTEND TO 5 FEET BEYOND OUTSIDE OF FOOTING) AND A 9 INCH THICK OVER-EXCAVATION AND REPLACEMENT UNDER ALL PARKING LOT AREAS (EXTEND 1.33 FEET BEYOND CURBS). VERIFY REQUIREMENTS WITH AND OBTAIN APPROVAL FROM PROJECT GEOTECHNICAL ENGINEER AND PROJECT ARCHITECT PRIOR TO EXECUTING.
4. CONTRACTOR TO CONFIRM WITH OWNER AND REMOVE AND DISPOSE OF OFFSITE ALL EXCESS SOIL, DEBRIS AND MATERIALS NOT REUSABLE FOR THIS PROJECT.
5. ON-SITE HANDICAP/DISABILITY ACCESS ROUTES SHALL COMPLY WITH THE FEDERAL AMERICANS WITH DISABILITIES ACT (ADA), STATE AND LOCAL REGULATIONS. IN GENERAL:
   - 5.1. MAXIMUM CROSS SLOPE OF ANY PAVEMENT PERPENDICULAR TO DIRECTION OF TRAVEL IS 2.0%.
   - 5.2. MAXIMUM SLOPE OF WALKWAYS WITHOUT HANDRAILS IN DIRECTION OF TRAVEL IS 5.0%.
   - 5.3. FOR RAMPS, THE MAXIMUM SLOPE IS 8.33% AND MAXIMUM RISE BETWEEN LANDINGS IS 30 INCHES. HANDRAILS ARE REQUIRED EACH SIDE OF ALL RAMPS WITH SLOPE GREATER THAN 5%.
   - 5.4. MAXIMUM SLOPE OF CURB RAMPS AND WINGS OF CURB RAMPS IS 8.33%. THE MAXIMUM LENGTH OF A CURB RAMP IS 6 FEET WITH A MAXIMUM 6-INCH RISE.
   - 5.5. PROVIDE FINISH PAVEMENT SURFACE TEXTURES IN ACCORDANCE WITH ADA.
   - 5.6. CONTACT ARCHITECT AND ENGINEER FOR INSTRUCTIONS PRIOR TO INSTALLING FINISH PAVEMENTS IN CONFLICT WITH ADA REQUIREMENTS.
6. STRAIGHT GRADE FINISH PAVEMENT BETWEEN CATCH BASIN AND SURROUNDING GUTTER ELEVATIONS. STRAIGHT GRADE BETWEEN GIVEN ELEVATION POINTS. BLEND FINISH GRADES BETWEEN GIVEN POINTS AND AT GRADE BREAKS.
7. SEE SHEET C1.0, SECTION 12.0 FOR CONSTRUCTION TESTING, INSPECTIONS, AND OBSERVATION REQUIREMENTS.
8. GRADING FOR PUBLIC IMPROVEMENTS IS SHOWN FOR CLARITY AND SHALL BE COORDINATED AND BUILT FROM THE PERMITTED PUBLIC IMPROVEMENT DRAWINGS. ONSITE GRADES AND FINISH FLOOR ELEVATIONS ARE RELATIVE TO APPROVED PUBLIC WORKS DRAWINGS. CONTRACTOR TO VERIFY AND COORDINATE W/ PUBLIC IMPROVEMENT DRAWINGS PRIOR TO SETTING ONSITE FINISH ELEVATIONS TYPICAL.

KEYNOTES FOR THIS SHEET

MARK	DESCRIPTION
1	INSTALL NEW CURB PER DETAIL x/C3.0.
2	INSTALL NEW ASPHALT PAVEMENT PER DETAIL x/C3.0.
3	NEW PAINT STRIPING, SEE ARCH.
4	NEW TRASH ENCLOSURE, SEE ARCH.
5	INSTALL NEW SIDEWALK PER DETAIL x/C3.0.
6	NEW LANDSCAPE, SEE LANDSCAPE DRAWINGS.
7	NEW CURB WALL
8	NEW CONCRETE PAD PER DETAIL X/C3.0.
9	NEW VEGETATED FACILITY FOR WATER QUALITY TREATMENT. SEE LANDSCAPE DRAWINGS FOR PLANTINGS.
10	CURB CUT, SEE DETAIL X/C3.0.
11	NEW PUBLIC SIDEWALK PER CITY STANDARD DETAIL. 1.5% CROSS SLOPE, TYP.
12	PROTECT EXISTING PUBLIC CURB AND PAVEMENT TO REMAIN, TYP.
13	NEW 40' WIDE DRIVEWAY.
14	NEW STAIR, SEE ARCH FOR HANDRAIL DETAILS.

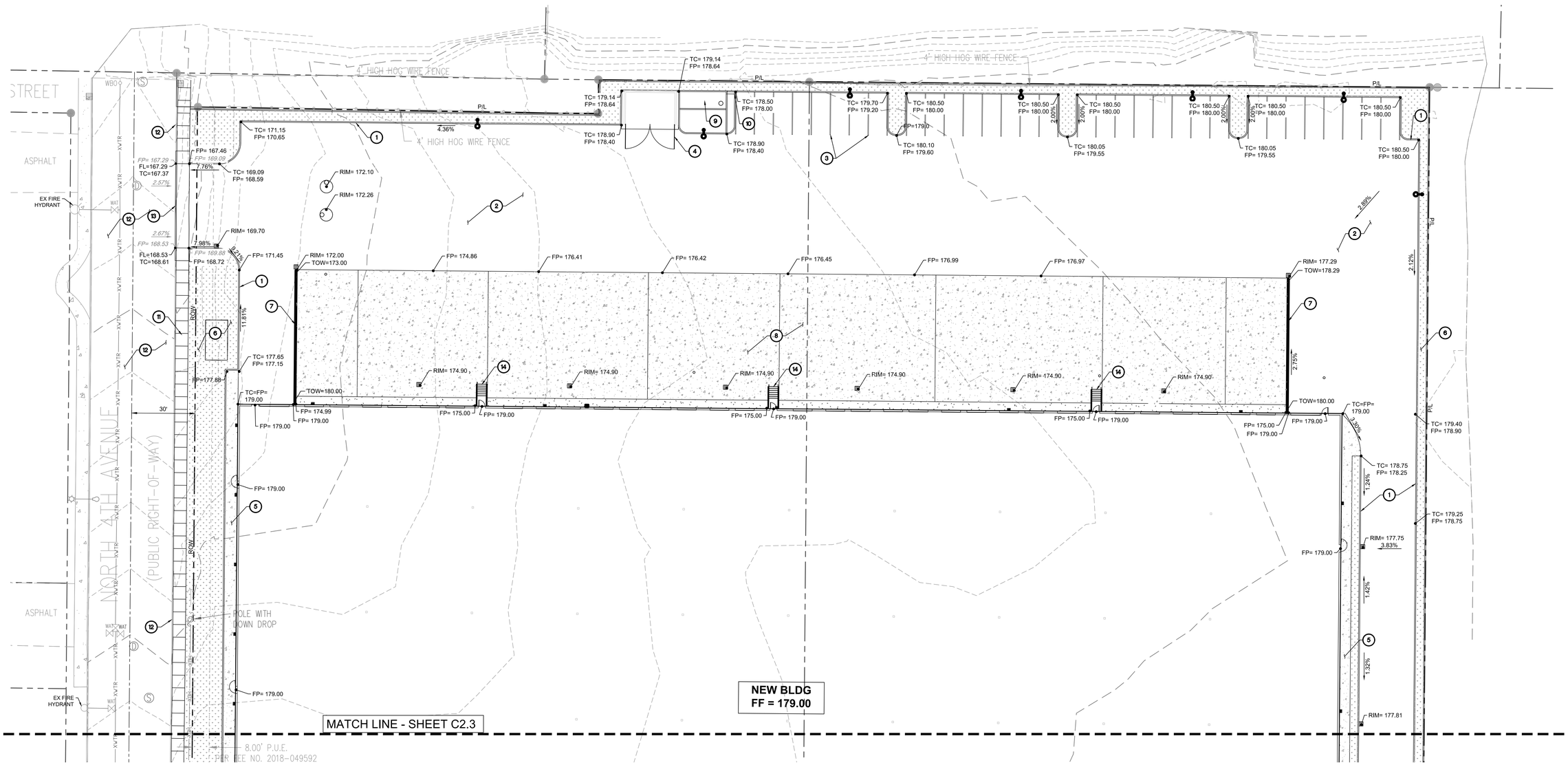

1 / C2.2 **UPPER GRADING PLAN**

SCALE: 1" = 20'-0"

GRAPHIC SCALE
20 0 10 20 40 80
(IN FEET)
1 inch = 20 feet

DRAFT DESIGN

MILDREN DESIGN GROUP

ARCHITECTURE | INTERIORS

4875 SW Griffith Drive Suite 300
Beaverton OR, 97005
(503) 244-0552

REGISTERED PROFESSIONAL ENGINEER
OREGON
KARI MILANI KUBOYAMA
06/09/22
PRELIMINARY NOT FOR CONSTRUCTION

RENEWS: 6-30-2023

WDY Structural Civil Engineers
6443 SW Beaverton-Hillsdale Hwy, suite 210 Portland, OR 97221
ph:503.203.8111 fx:503.203.8122 www.wdy.com

Client/ Owner:

ALTABIRD INVESTMENTS

Project:

ALTABIRD INVESTMENTS CORNELIUS

TENTH AVENUE
INDUSTRIAL CENTER
Lot:13-16, CORNELIUS
OR, 97113

Sheet Title:

UPPER GRADING PLAN

Revisions:

#	Description	Date

MILDREN DESIGN GROUP, P.C., 2022, ALL RIGHTS RESERVED ©

THESE DRAWINGS ARE THE PROPERTY OF MILDREN DESIGN GROUP, P.C., AND ARE NOT TO BE USED OR REPRODUCED IN ANY MANNER, EXCEPT WITH THE PRIOR WRITTEN PERMISSION OF MILDREN DESIGN GROUP, P.C.

Date:	2022-04-26
Drawn by:	Checked by:
JR	KK
Job Number:	122013

Sheet

C2.2

FILE: 22120_C2.2.DWG UPPER GRADING PLAN 8/9/2022 10:54:51 AM – KUBOYAMA

GRADING NOTES:

1. CONTRACTOR IS RESPONSIBLE TO PERFORM CUT AND FILL EARTH WORK IN SUCH A MANNER TO PROTECT NATIVE SOILS FROM BEING OVER WORKED AND FROM BECOMING TOO SATURATED DURING WET WEATHER. DURING WET WEATHER PERFORM WORK IN AREAS SMALL ENOUGH TO CUT AND ROCK SITE AREAS UNDER PAVEMENT AND BUILDING TO PREVENT AREAS OF NATIVE SOIL BEING EXPOSED TO WET WEATHER. THIS SITE SHALL HAVE CEMENT DEEP SOIL MISSING COLUMNS DESIGNED, INSTALLED AND SHOWN BY OTHERS. COORDINATE SITE WORK AND ESC MEASURES ACCORDINGLY.
2. REFER TO ARCHITECTURAL SITE PLANS FOR ALL SITE LAYOUT DIMENSIONS INCLUDING WALKWAYS, BUILDING, AND RETAINING WALLS.
3. PROVIDE SEPARATE BID ADDITIVES IN SPEC SECTION 12.0 FOR WET WEATHER CONSTRUCTION OVER-EXCAVATION OF SUBGRADE AND REPLACEMENT WITH CRUSHED ROCK. PROVIDE FOR A 2 FOOT THICK OVER-EXCAVATION AND REPLACEMENT OF NATIVE SOIL UNDER THE BUILDING FOOTPRINT (EXTEND TO 5 FEET BEYOND OUTSIDE OF FOOTING) AND A 9 INCH THICK OVER-EXCAVATION AND REPLACEMENT UNDER ALL PARKING LOT AREAS (EXTEND 1.33 FEET BEYOND CURBS). VERIFY REQUIREMENTS WITH AND OBTAIN APPROVAL FROM PROJECT GEOTECHNICAL ENGINEER AND PROJECT ARCHITECT PRIOR TO EXECUTING.
4. CONTRACTOR TO CONFIRM WITH OWNER AND REMOVE AND DISPOSE OF OFFSITE ALL EXCESS SOIL, DEBRIS AND MATERIALS NOT REUSABLE FOR THIS PROJECT.
5. ON-SITE HANDICAP/DISABILITY ACCESS ROUTES SHALL COMPLY WITH THE FEDERAL AMERICANS WITH DISABILITIES ACT (ADA), STATE AND LOCAL REGULATIONS. IN GENERAL:
   - 5.1. MAXIMUM CROSS SLOPE OF ANY PAVEMENT PERPENDICULAR TO DIRECTION OF TRAVEL IS 2.0%.
   - 5.2. MAXIMUM SLOPE OF WALKWAYS WITHOUT HANDRAILS IN DIRECTION OF TRAVEL IS 5.0%.
   - 5.3. FOR RAMPS, THE MAXIMUM SLOPE IS 8.33% AND MAXIMUM RISE BETWEEN LANDINGS IS 30 INCHES. HANDRAILS ARE REQUIRED EACH SIDE OF ALL RAMPS WITH SLOPE GREATER THAN 5%.
   - 5.4. MAXIMUM SLOPE OF CURB RAMPS AND WINGS OF CURB RAMPS IS 8.33%. THE MAXIMUM LENGTH OF A CURB RAMP IS 6 FEET WITH A MAXIMUM 6-INCH RISE.
   - 5.5. PROVIDE FINISH PAVEMENT SURFACE TEXTURES IN ACCORDANCE WITH ADA.
   - 5.6. CONTACT ARCHITECT AND ENGINEER FOR INSTRUCTIONS PRIOR TO INSTALLING FINISH PAVEMENTS IN CONFLICT WITH ADA REQUIREMENTS.
6. STRAIGHT GRADE FINISH PAVEMENT BETWEEN CATCH BASIN AND SURROUNDING GUTTER ELEVATIONS. STRAIGHT GRADE BETWEEN GIVEN ELEVATION POINTS. BLEND FINISH GRADES BETWEEN GIVEN POINTS AND AT GRADE BREAKS.
7. SEE SHEET C1.0, SECTION 12.0 FOR CONSTRUCTION TESTING, INSPECTIONS, AND OBSERVATION REQUIREMENTS.
8. GRADING FOR PUBLIC IMPROVEMENTS IS SHOWN FOR CLARITY AND SHALL BE COORDINATED AND BUILT FROM THE PERMITTED PUBLIC IMPROVEMENT DRAWINGS. ONSITE GRADES AND FINISH FLOOR ELEVATIONS ARE RELATIVE TO APPROVED PUBLIC WORKS DRAWINGS. CONTRACTOR TO VERIFY AND COORDINATE W/ PUBLIC IMPROVEMENT DRAWINGS PRIOR TO SETTING ONSITE FINISH ELEVATIONS TYPICAL.

KEYNOTES FOR THIS SHEET

MARK	DESCRIPTION
1	INSTALL NEW CURB PER DETAIL x/C3.0.
2	INSTALL NEW ASPHALT PAVEMENT PER DETAIL x/C3.0.
3	NEW PAINT STRIPING, SEE ARCH.
4	NEW CURB WALL.
5	INSTALL NEW SIDEWALK PER DETAIL x/C3.0.
6	NEW LANDSCAPE, SEE LANDSCAPE DRAWINGS.
7	NEW PUBLIC SIDEWALK PER CITY STANDARD DETAIL XX ON SHEET C3.0.
8	NEW CURB RETURN PER CITY STANDARD DETAIL XX ON SHEET C3.0.

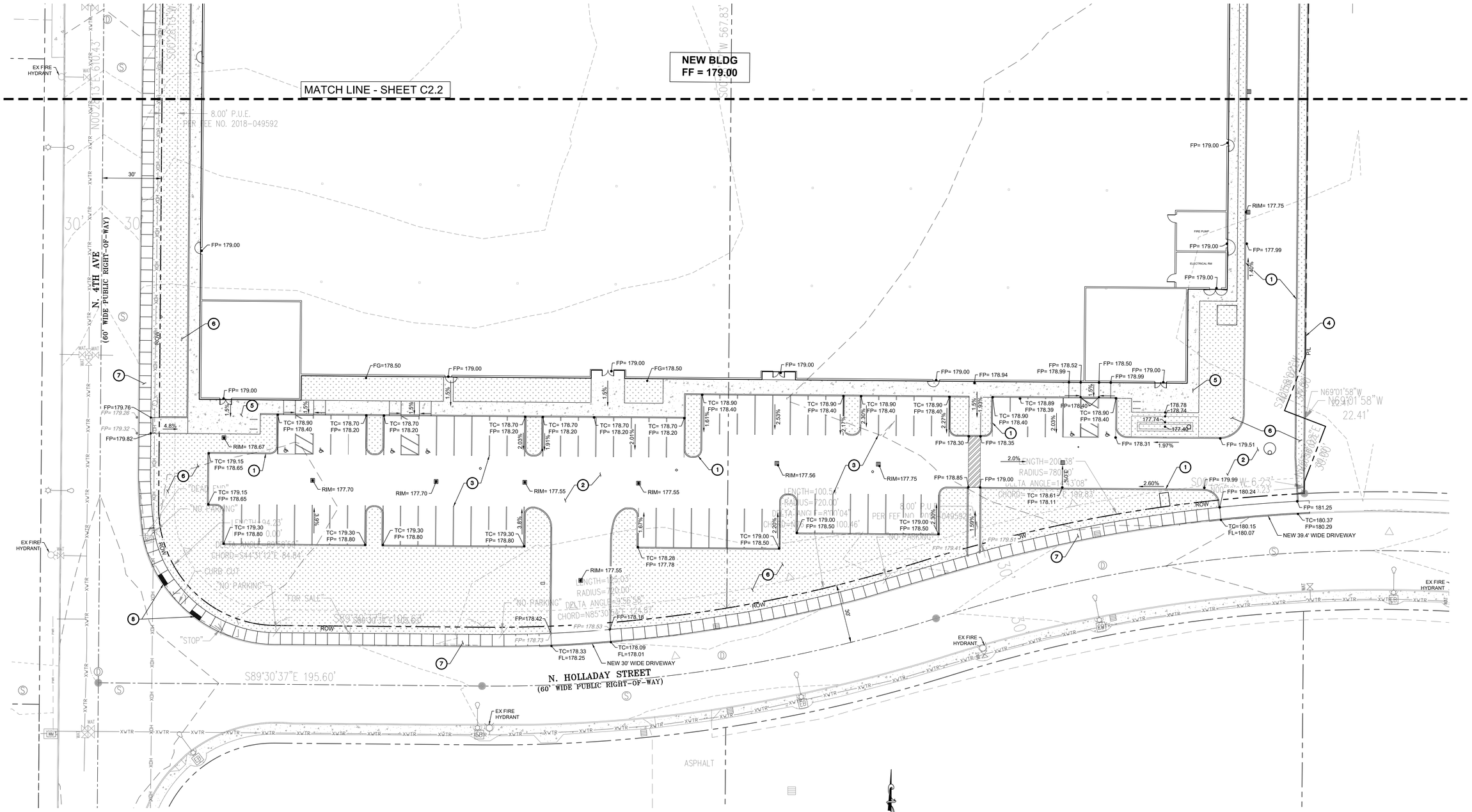

1 C2.3 **LOWER GRADING PLAN**

SCALE: 1" = 20'-0"

DRAFT DESIGN

MILDREN DESIGN GROUP

ARCHITECTURE | INTERIORS

4875 SW Griffith Drive Suite 300
Beaverton OR, 97005
(503) 244-0552

PRELIMINARY NOT FOR CONSTRUCTION

RENEWS: 6-30-2023

WDY Structural Civil Engineers
6443 SW Beaverton-Hillsdale Hwy, suite 210 Portland, OR 97221
ph:503.203.8111 fx:503.203.8122 www.wdy.com

Client/ Owner:

ALTABIRD INVESTMENTS

Project:

ALTABIRD INVESTMENTS CORNELIUS

TENTH AVENUE
INDUSTRIAL CENTER
Lot:13-16, CORNELIUS
OR, 97113

Sheet Title:

LOWER GRADING PLAN

Revisions:

#	Description	Date

MILDREN DESIGN GROUP, P.C., 2022, ALL RIGHTS RESERVED ©

THESE DRAWINGS ARE THE PROPERTY OF MILDREN DESIGN GROUP, P.C., AND ARE NOT TO BE USED OR REPRODUCED IN ANY MANNER, EXCEPT WITH THE PRIOR WRITTEN PERMISSION OF MILDREN DESIGN GROUP, P.C.

Date:	2022-04-26
Drawn by: JR	Checked by: KK
Job Number:	122013
Sheet	C2.3

FILE: 22120_C2.3.DWG LOWER GRADING PLAN 8/9/2022 10:55:03 AM – KUBOYAMA

NOTES:

1. MINIMUM 12" OVERLAP OF ALL SEAMS REQUIRED.
2. BARRIER REQUIRED @ TOE OF STOCKPILE.
3. COVERING MAINTAINED TIGHTLY IN PLACE BY USING SANDBAGS OR APPROVED EQUAL ON ROPES WITH A MAXIMUM 10' GRID SPACING IN ALL DIRECTIONS.
4. PLASTIC TO EXTEND MINIMUM 1' BEYOND TOE OF SLOPE.

FOR FURTHER INFORMATION ON DESIGN CRITERIA SEE xxx OF xxxx

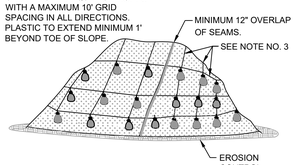

SOIL STOCKPILE WITH PLASTIC SHEETING

1 C3.0 SOIL STOCKPILE DETAIL
N.T.S.

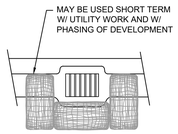

CATCH BASIN
N.T.S.

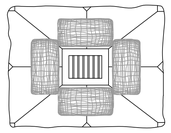

AREA DRAIN
N.T.S.

2 C3.0 BIOFILTER BAGS - TEMPORARY
N.T.S.

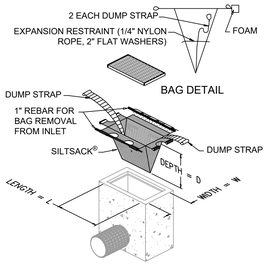

Regular Flow Only
Do not use High Flow Insert Bags.

3 C3.0 FILTER BAG INLET
N.T.S.

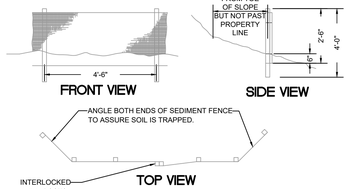

NOTES:
1. BURY BOTTOM OF FILTER FABRIC 6" MIN. VERTICALLY BELOW GRADE.
2. 2" x 2" FIR, PINE, OR STEEL FENCE POSTS.
3. STITCHED LOOPS TO BE INSTALLED UPHILL SIDE OF SLOPE.
4. COMPACT NATIVE FILL IN ON BOTH SIDES OF FILTER FABRIC TRENCH.

4 C3.0 SEDIMENT FENCE
N.T.S.

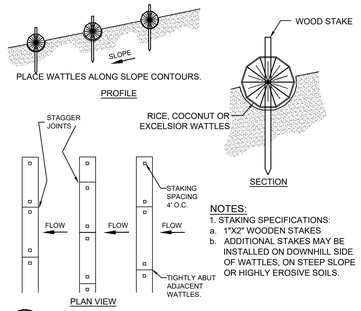

NOTES:
1. STAKING SPECIFICATIONS:
   a. 1"X2" WOODEN STAKES
   b. ADDITIONAL STAKES MAY BE INSTALLED ON DOWNHILL SIDE OF WATTLES, ON STEEP SLOPE OR HIGHLY EROSIVE SOILS.

5 C3.0 SEDIMENT CONTROL WATTLES
N.T.S.

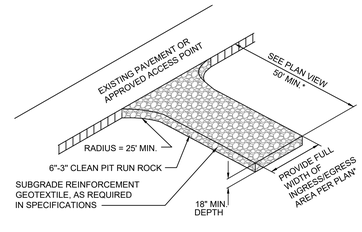

*20' MIN. FOR SINGLE FAMILY AND DUPLEX RESIDENTIAL

6 C3.0 GRAVEL CONSTRUCTION ENTRANCE (SEE EROSION CONTROL NOTES)
N.T.S.

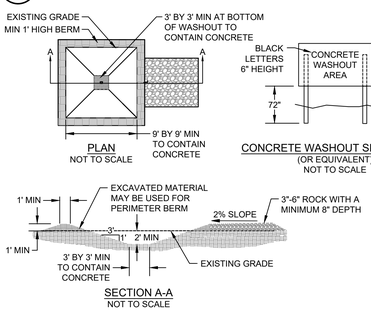

NOTES:

1. WASHOUT FACILITIES SHALL BE MAINTAINED TO PROVIDE ADEQUATE HOLDING CAPACITY WITH A MINIMUM FREEBOARD OF 12 INCHES.
2. WASHOUT FACILITIES MUST BE CLEANED, OR NEW FACILITIES MUST BE CONSTRUCTED AND READY FOR USE ONCE THE WASHOUT IS 75% FULL.
3. IF THE WASHOUT IS NEARING CAPACITY, VACUUM AND DISPOSE OF THE WASTE MATERIAL IN AN APPROVED MANNER.
4. TEMPORARY CONCRETE WASHOUT FACILITIES SHALL BE LOCATED A MINIMUM OF 50 FT FROM SENSITIVE AREAS INCLUDING OPEN DRAINAGE FACILITIES AND WATER SOURCES.
5. CONCRETE WASHOUT FACILITIES SHALL BE CONSTRUCTED AND MAINTAINED IN SUFFICIENT QUANTITY AND SIZE TO CONTAIN ALL LIQUID AND CONCRETE WASTE GENERATED BY WASHOUT OPERATIONS.
6. INSTALL CONCRETE WASHOUT SIGN WITHIN 30 FEET OF TEMPORARY CONCRETE WASHOUT FACILITY.
7. TEMPORARY CONCRETE WASHOUTS MAY BE A PREFABRICATED CONTAINER THAT IS PORTABLE AND REUSABLE.

7 C3.0 CONCRETE WASHOUT
N.T.S.

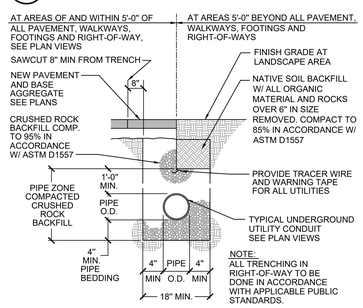

NOTE:
ALL TRENCHING IN RIGHT-OF-WAY TO BE DONE IN ACCORDANCE WITH APPLICABLE PUBLIC STANDARDS.

8 C3.0 TYPICAL UTILITY TRENCH SECTION
1" = 1'-0"

9 C3.0 TYPICAL EXTERIOR DOWN SPOUT CONNECTION
N.T.S.

10 C3.0 LANDSCAPE AREA DRAIN
N.T.S.

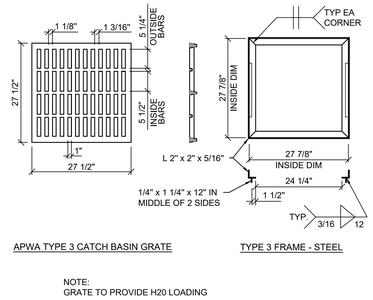

11 C3.0 RECTORSEAL "CLEAN CHECK" BACKWATER VALVE ASSEMBLY FOR FOUNDATION DRAIN (TYP)
1/2" = 1'-0"

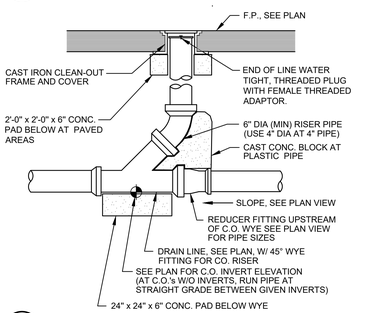

12 C3.0 TYP. CLEAN OUT AT VEHICLE PAVEMENT AREAS
N.T.S.

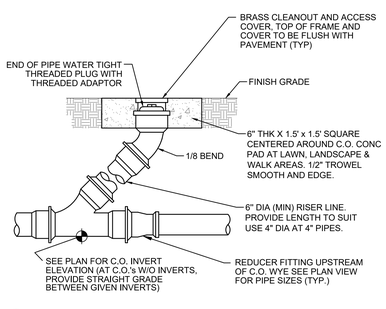

13 C3.0 CLEANOUT AT WALKS, SLABS AND PLANTERS
1" = 1'-0"

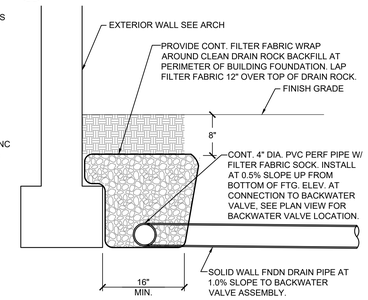

14 C3.0 TYPICAL EXTERIOR FOUNDATION DRAIN
1" = 1'-0"

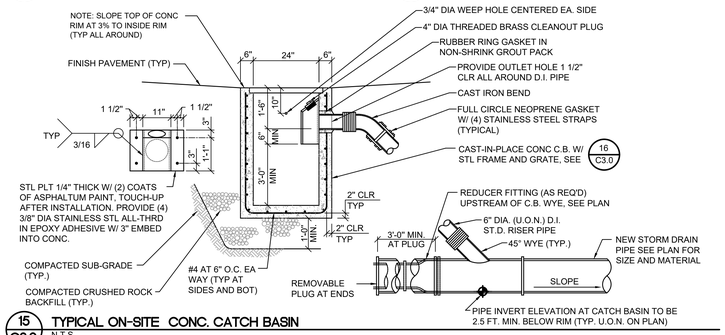

15 C3.0 TYPICAL ON-SITE CONC. CATCH BASIN
N.T.S.

APWA TYPE 3 CATCH BASIN GRATE

TYPE 3 FRAME - STEEL

NOTE:
GRATE TO PROVIDE H20 LOADING

16 C3.0 CAST IRON GRATE-CAST CONCRETE CATCH BASIN
REF: AWPA STD DETAIL #305B

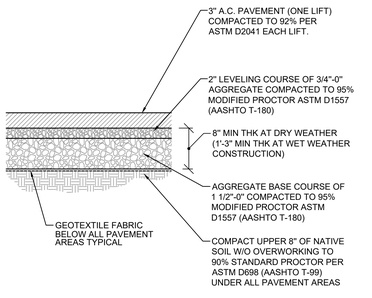

17 C3.0 TYPICAL ASPHALTIC PAVEMENT SECTION
1" = 1'-0"

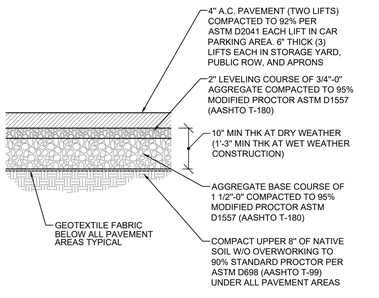

18 C3.0 TYPICAL HEAVY ASPHALTIC PAVEMENT SECTION
1" = 1'-0"

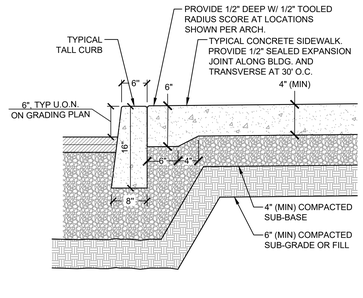

19 C3.0 TYPICAL CONCRETE WALK
N.T.S.

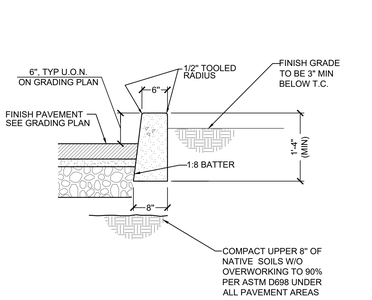

20 C3.0 TYPICAL FULL DEPTH CONCRETE CURB
N.T.S.

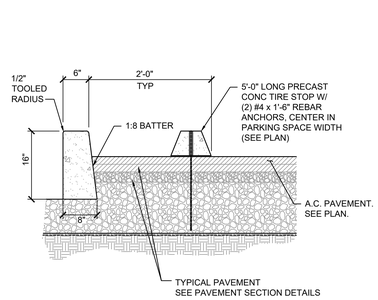

21 C3.0 CONCRETE TIRE STOP
1" = 1'-0"

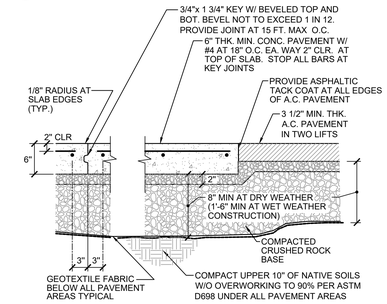

22 C3.0 TYP. CONCRETE / ASPHALTIC PAVEMENT SECTION
1" = 1'-0"

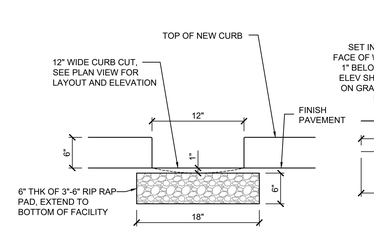

23 C3.0 CURB CUT AT LANDSCAPE
NTS

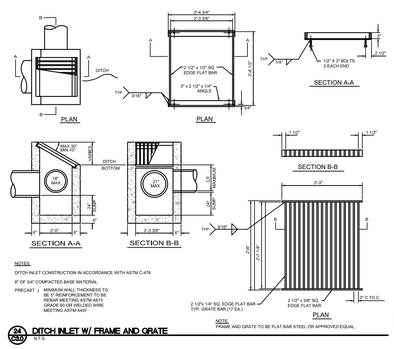

NOTES:
DITCH INLET CONSTRUCTION IN ACCORDANCE WITH ASTM C-478
8" OF 3/4" COMPACTED BASE MATERIAL
PRECAST :
1. MINIMUM WALL THICKNESS TO BE 5" REINFORCEMENT TO BE DEFORMED BILLET STEEL GRADE 60 OR WELDED WIRE MEETING ASTM A497

NOTE:
FRAME AND GRATE TO BE FLAT BAR STEEL OR APPROVED EQUAL.

24 C3.0 DITCH INLET W/ FRAME AND GRATE
N.T.S.

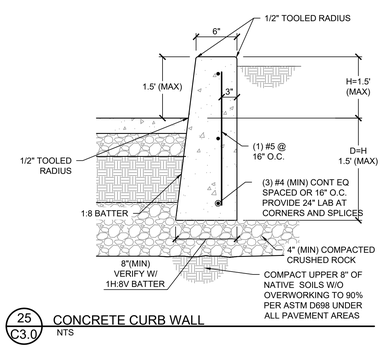

25 C3.0 CONCRETE CURB WALL
NTS

DRAFT DESIGN

FILE: 22120_C3.0.DWG CIVIL DETAILS 8/9/2022 10:55:22 AM – KUBOYAMA

MILDREN DESIGN GROUP
ARCHITECTURE | INTERIORS
4875 SW Griffith Drive Suite 300
Beaverton OR, 97005
(503) 244-0552

REGISTERED PROFESSIONAL ENGINEER
PRELIMINARY NOT FOR CONSTRUCTION
08/09/2022
RENEWS: 6-30-2023

Structural Civil Engineers
WDY
6443 SW Beaverton-Hillsdale Hwy, suite 210 Portland, OR 97221
ph:503.203.8111 fx:503.203.8122 www.wdy.com

Client/ Owner:
ALTABIRD INVESTMENTS

Project:
ALTABIRD INVESTMENTS CORNELIUS

TENTH AVENUE INDUSTRIAL CENTER
Lot:13-16, CORNELIUS OR, 97113

Sheet Title:
CIVIL DETAILS

Revisions:

#	Description	Date

MILDREN DESIGN GROUP, P.C., 2022, ALL RIGHTS RESERVED ©

THESE DRAWINGS ARE THE PROPERTY OF MILDREN DESIGN GROUP, P.C., AND ARE NOT TO BE USED OR REPRODUCED IN ANY MANNER, EXCEPT WITH THE PRIOR WRITTEN PERMISSION OF MILDREN DESIGN GROUP, P.C.

Date:	2022-04-26
Drawn by: JR	Checked by: KK
Job Number:	122013
Sheet	C3.0

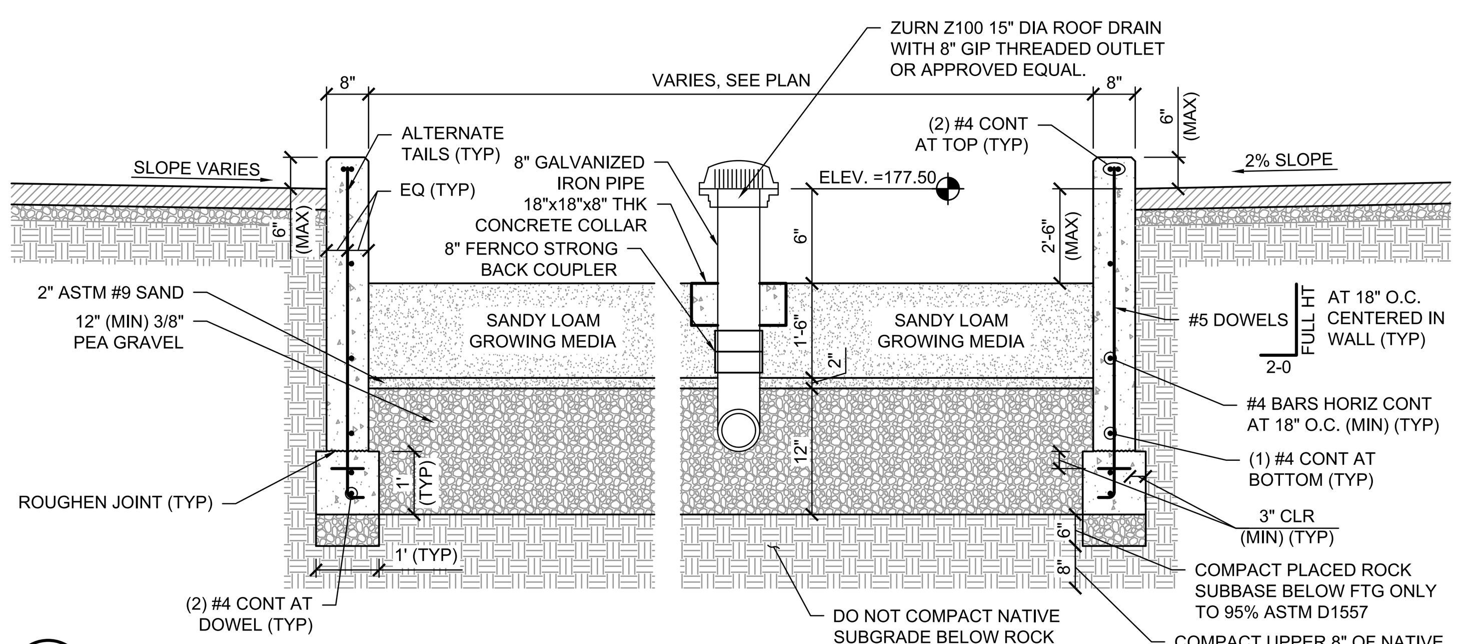

1/C3.1 INFILTRATION STORM PLANTER CROSS SECTION
1/2" = 1'-0"

SOIL SHALL NOT BE WORKED WHEN IT IS SO WET OR SO DRY AS TO CAUSE EXCESSIVE COMPACTION OR THE FORMING OF HARD CLODS OR DUST.

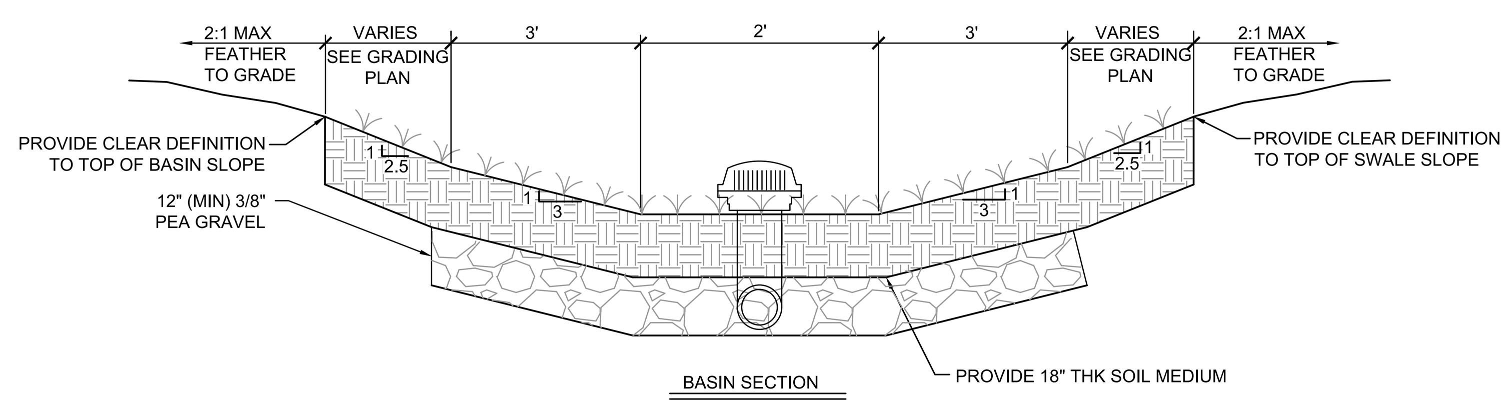

2/C3.1 WATER QUALITY BASIN CROSS SECTION
N.T.S.

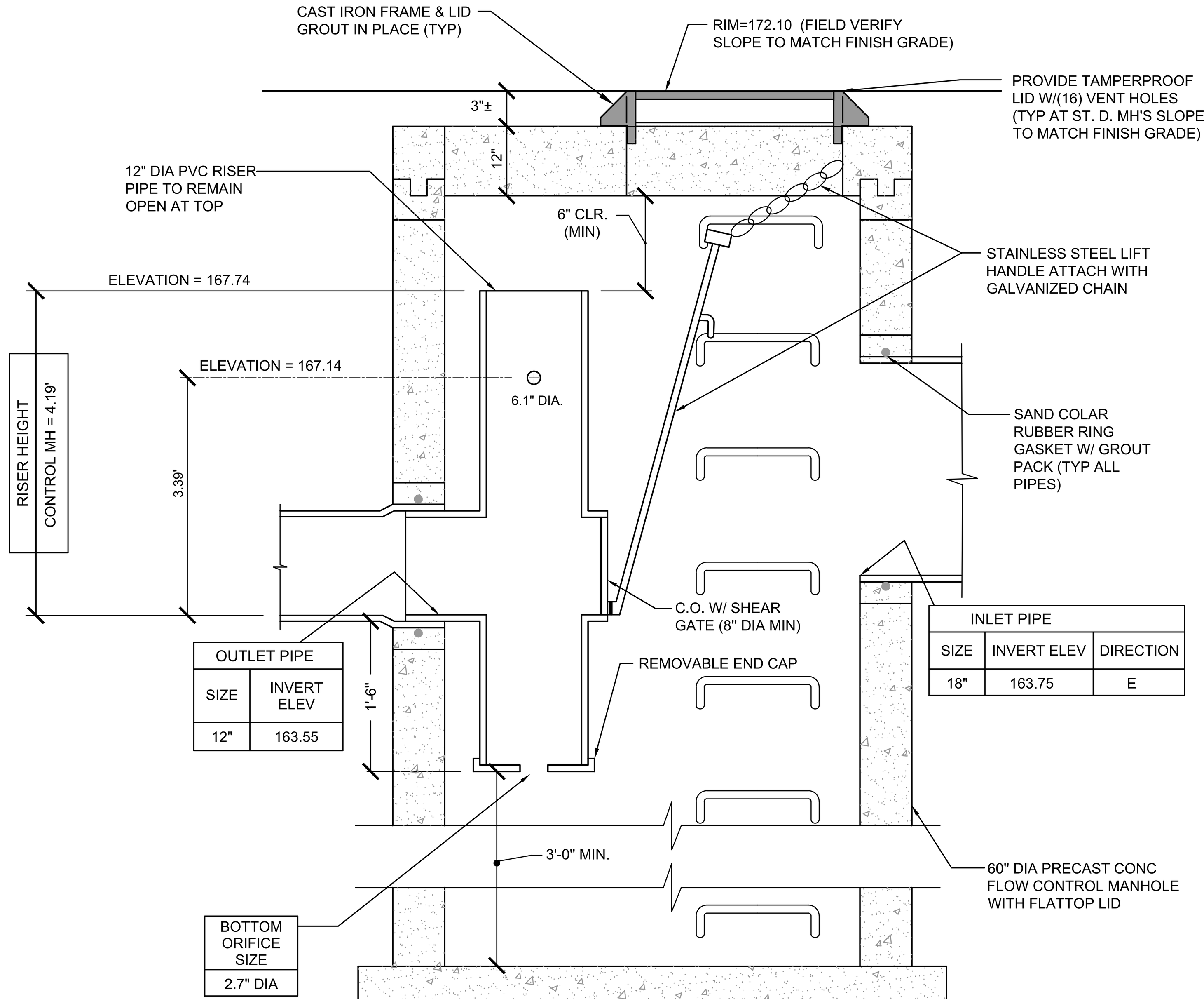

INLET PIPE		
SIZE	INVERT ELEV	DIRECTION
18"	163.75	E

OUTLET PIPE	
SIZE	INVERT ELEV
12"	163.55

BOTTOM ORIFICE SIZE
2.7" DIA

NOTE: ALTERNATES ARE ACCEPTABLE PROVIDED MATERIAL SPECIFICATIONS ARE MET AND FLANGE BOLT PATTERN MATCHES.

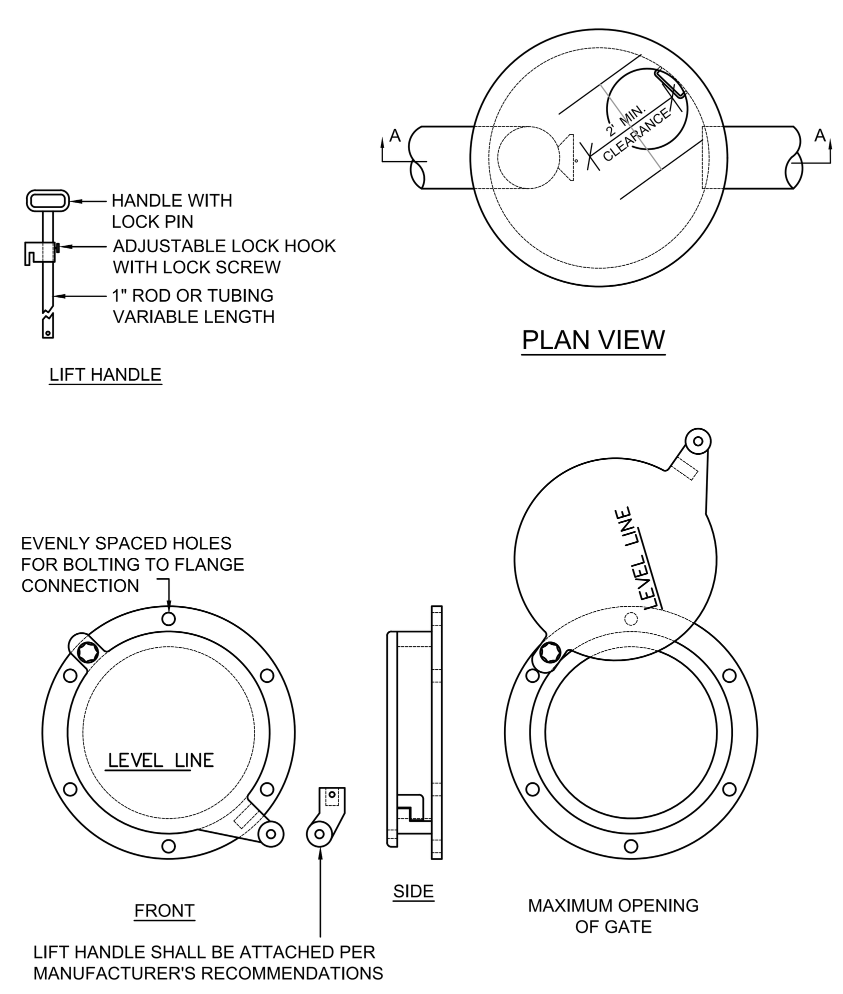

CLEANOUT/SHEAR GATE

3/C3.1 60" DIA. PRIVATE STORM DRAIN DETENTION OUTLET CONTROL MANHOLE
N.T.S.

MH–DetentionControl

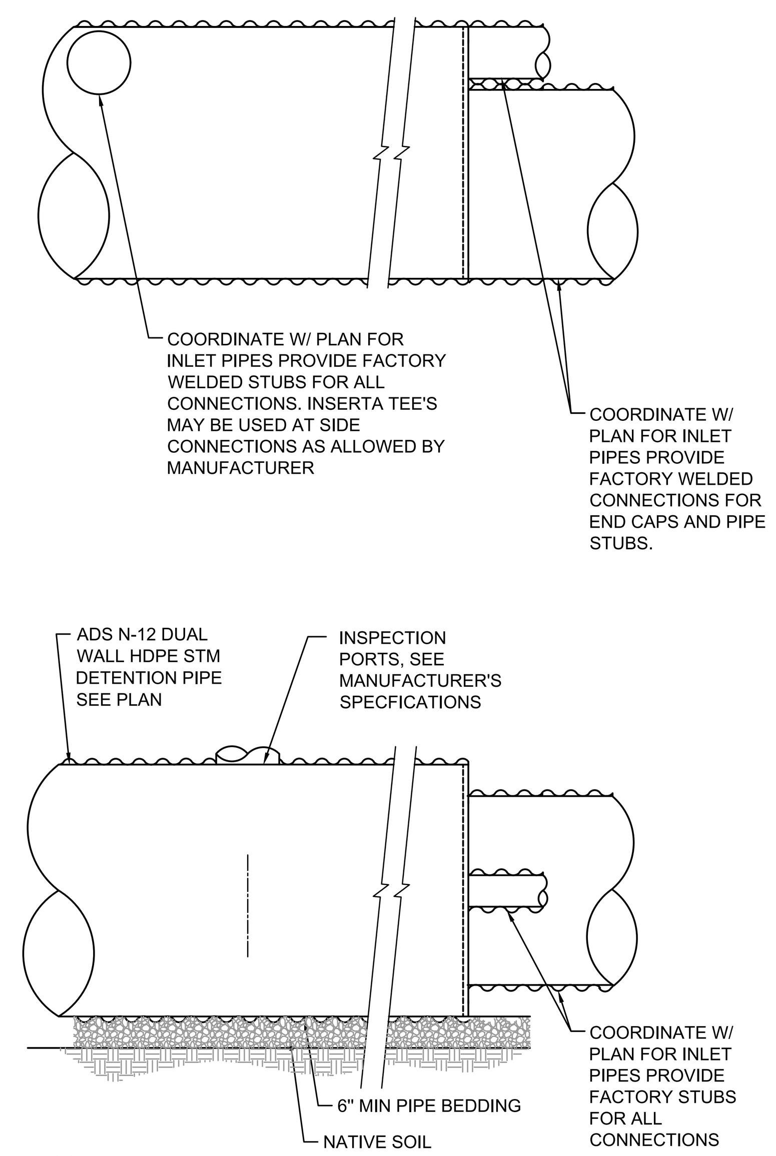

4/C3.1 ADS HDPE DETENTION PIPE DETAILS
1/2"=1'-0"

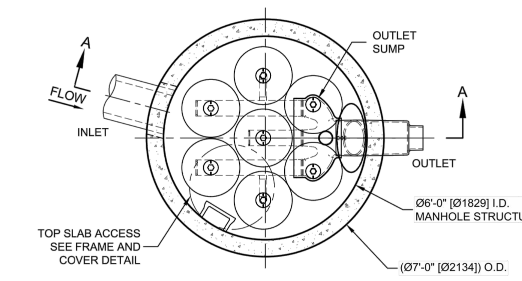

PLAN VIEW
STANDARD OUTLET RISER
FLOWKIT: 42A

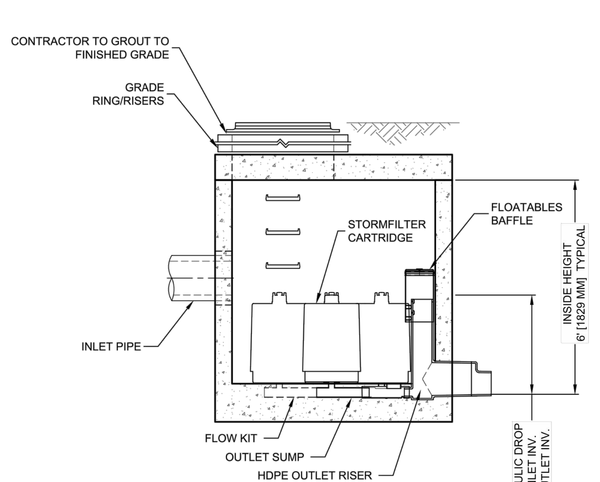

SECTION A-A

The Stormwater Management StormFilter®

THIS PRODUCT MAY BE PROTECTED BY ONE OR MORE OF THE FOLLOWING U.S. PATENTS: 5,322,629; 5,624,576; 5,707,527; 5,985,157; 6,027,639; 6,649,048; RELATED FOREIGN PATENTS, OR OTHER PATENTS PENDING.

STORMFILTER DESIGN NOTES

STORMFILTER TREATMENT CAPACITY IS A FUNCTION OF THE CARTRIDGE SELECTION AND THE NUMBER OF CARTRIDGES. THE STANDARD MANHOLE STYLE IS SHOWN WITH THE MAXIMUM NUMBER OF CARTRIDGES (7). VOLUME SYSTEM IS ALSO AVAILABLE WITH MAXIMUM 7 CARTRIDGES. Ø6'-0" [1829 mm] MANHOLE STORMFILTER PEAK HYDRAULIC CAPACITY IS 1.5 CFS [42.5 L/s] . IF THE SITE CONDITIONS EXCEED 1.5 CFS [42.5 L/s] AN UPSTREAM BYPASS STRUCTURE IS REQUIRED.

CARTRIDGE SELECTION

CARTRIDGE HEIGHT	27" [686 mm]			18" [458 mm]			LOW DROP		
RECOMMENDED HYDRAULIC DROP (H)	3.05' [930 mm]			2.3' [700 mm]			1.8' [550 mm]		
SPECIFIC FLOW RATE (gpm/sf) [L/s/m²]	2 [1.30]	1.67* [1.08]	1 [0.65]	2 [1.30]	1.67* [1.08]	1 [0.65]	2 [1.30]	1.67* [1.08]	1 [0.65]
CARTRIDGE FLOW RATE (gpm) [L/s]	22.5 [1.42]	18.79 [1.19]	11.25 [0.71]	15 [0.95]	12.53 [0.79]	7.5 [0.44]	10 [0.63]	8.35 [0.54]	5 [0.32]

* 1.67 gpm/sf [1.08 L/s/m²] SPECIFIC FLOW RATE IS APPROVED WITH PHOSPHOSORB® (PSORB) MEDIA ONLY

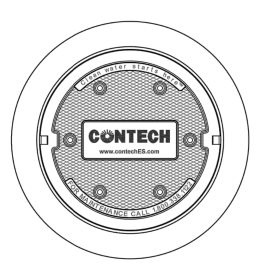

FRAME AND COVER
(DIAMETER VARIES)
N.T.S.

SITE SPECIFIC DATA REQUIREMENTS

	SOUTH		NORTH
STRUCTURE ID			
WATER QUALITY FLOW RATE (cfs) [L/s]	0.24 CFS		0.34 CFS
PEAK FLOW RATE (cfs) [L/s]	2.81 CFS		3.69 CFS
RETURN PERIOD OF PEAK FLOW (yrs)	25 YR		25 YR
CARTRIDGE HEIGHT (SEE TABLE ABOVE)	27"		27"
NUMBER OF CARTRIDGES REQUIRED	5		7
CARTRIDGE FLOW RATE	22.5		22.5
MEDIA TYPE (PERLITE, ZPG, PSORB)	ZPG		ZPG

PIPE DATA:	I.E.	MATERIAL	DIAMETER
INLET PIPE #1	*	*	*
INLET PIPE #2	*	*	*
OUTLET PIPE	*	*	*
RIM ELEVATION			*

ANTI-FLOTATION BALLAST	WIDTH	HEIGHT
	*	*

NOTES/SPECIAL REQUIREMENTS:

* PER ENGINEER OF RECORD

GENERAL NOTES
1. CONTECH TO PROVIDE ALL MATERIALS UNLESS NOTED OTHERWISE.
2. DIMENSIONS MARKED WITH ( ) ARE REFERENCE DIMENSIONS. ACTUAL DIMENSIONS MAY VARY.
3. FOR SITE SPECIFIC DRAWINGS WITH DETAILED VAULT DIMENSIONS AND WEIGHTS, PLEASE CONTACT YOUR CONTECH ENGINEERED SOLUTIONS LLC REPRESENTATIVE. www.ContechES.com
4. STORMFILTER WATER QUALITY STRUCTURE SHALL BE IN ACCORDANCE WITH ALL DESIGN DATA AND INFORMATION CONTAINED IN THIS DRAWING.
5. STRUCTURE SHALL MEET AASHTO HS-20 LOAD RATING, ASSUMING EARTH COVER OF 0' - 5' [1524 mm] AND GROUNDWATER ELEVATION AT, OR BELOW, THE OUTLET PIPE INVERT ELEVATION. ENGINEER OF RECORD TO CONFIRM ACTUAL GROUNDWATER ELEVATION. CASTINGS SHALL MEET AASHTO M306 AND BE CAST WITH THE CONTECH LOGO.
6. FILTER CARTRIDGES SHALL BE MEDIA-FILLED, PASSIVE, SIPHON ACTUATED, RADIAL FLOW, AND SELF CLEANING. RADIAL MEDIA DEPTH SHALL BE 7-INCHES [178 mm]. FILTER MEDIA CONTACT TIME SHALL BE AT LEAST 38 SECONDS.
7. SPECIFIC FLOW RATE IS EQUAL TO THE FILTER TREATMENT CAPACITY (gpm) [L/s] DIVIDED BY THE FILTER CONTACT SURFACE AREA (sq ft)[m²].
8. STORMFILTER STRUCTURE SHALL BE PRECAST CONCRETE CONFORMING TO ASTM C-478 AND AASHTO LOAD FACTOR DESIGN METHOD.

INSTALLATION NOTES
A. ANY SUB-BASE, BACKFILL DEPTH, AND/OR ANTI-FLOTATION PROVISIONS ARE SITE-SPECIFIC DESIGN CONSIDERATIONS AND SHALL BE SPECIFIED BY ENGINEER OF RECORD.
B. CONTRACTOR TO PROVIDE EQUIPMENT WITH SUFFICIENT LIFTING AND REACH CAPACITY TO LIFT AND SET THE STORMFILTER STRUCTURE.
C. CONTRACTOR TO INSTALL JOINT SEALANT BETWEEN ALL STRUCTURE SECTIONS AND ASSEMBLE STRUCTURE.
D. CONTRACTOR TO PROVIDE, INSTALL, AND GROUT INLET PIPE(S).
E. CONTRACTOR TO PROVIDE AND INSTALL CONNECTOR TO THE OUTLET RISER STUB. STORMFILTER EQUIPPED WITH A DUAL DIAMETER HDPE OUTLET STUB AND SAND COLLAR. IF OUTLET PIPE IS LARGER THAN 8 INCHES [200 mm], CONTRACTOR TO REMOVE THE 8 INCH [200 mm] OUTLET STUB AT MOLDED-IN CUT LINE. COUPLING BY FERNCO OR EQUAL AND PROVIDED BY CONTRACTOR.
F. CONTRACTOR TO TAKE APPROPRIATE MEASURES TO PROTECT CARTRIDGES FROM CONSTRUCTION-RELATED EROSION RUNOFF.

CONTECH® ENGINEERED SOLUTIONS LLC
www.contechES.com
9025 Centre Pointe Dr., Suite 400, West Chester, OH 45069
800-338-1122 513-645-7000 513-645-7993 FAX

SFMH72
STORMFILTER
STANDARD DETAIL

MILDREN DESIGN GROUP
ARCHITECTURE | INTERIORS
4875 SW Griffith Drive Suite 300
Beaverton OR, 97005
(503) 244-0552

PRELIMINARY NOT FOR CONSTRUCTION 08/09/22
REGISTERED PROFESSIONAL ENGINEER 86493PE OREGON KARI NALANI KUBOYAMA
RENEWS: 6-30-2023

WDY Structural · Civil Engineers
6443 SW Beaverton-Hillsdale Hwy, suite 210 Portland, OR 97221
ph:503.203.8111 fx:503.203.8122 www.wdyi.com

Client/ Owner:
ALTABIRD INVESTMENTS

Project:
ALTABIRD INVESTMENTS CORNELIUS

TENTH AVENUE INDUSTRIAL CENTER
Lot:13-16, CORNELIUS
OR, 97113

Sheet Title:
CIVIL DETAILS

Revisions:

#	Description	Date

MILDREN DESIGN GROUP, P.C., 2022, ALL RIGHTS RESERVED ©
THESE DRAWINGS ARE THE PROPERTY OF MILDREN DESIGN GROUP, P.C., AND ARE NOT TO BE USED OR REPRODUCED IN ANY MANNER, EXCEPT WITH THE PRIOR WRITTEN PERMISSION OF MILDREN DESIGN GROUP, P.C.

Date: 2022-04-26
Drawn by: JR
Checked by: KK
Job Number: 122013
Sheet C3.1

DRAFT DESIGN

FILE: 22120_C3.1.DWG CIVIL DETAILS 8/9/2022 10:55:34 AM -- KUBOYAMA

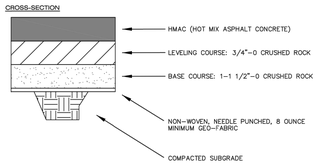

THICKNESS

	ARTERIALS AND INDUSTRIAL STREETS	COLLECTORS	LOCAL STREETS	ALLEYS	MAINTENANCE ACCESS ROADS
HMAC	LEVEL 3 6"	LEVEL 2 6"	LEVEL 2 4"	LEVEL 2 3"	LEVEL 2 3"
LEVELING COURSE	2"	2"	2"	2"	2"
BASE COURSE	14"	14"	10"	10"	6"

NOTE:

1. THE MAXIMUM LIFT THICKNESS FOR HMAC SHALL BE 2 INCHES.
2. SUBGRADE COMPACTED TO 95% AASHTO T-99
3. ALLEYS ARE GENERALLY PAVED WITH CONCRETE. THE ALLEY COLUMN IN THE TABLE ABOVE IS FOR SITUATIONS WHERE ONLY A PORTION OF AN EXISTING ALLEY IS PAVED.

Cornelius Oregon's Family Town | ASPHALT PAVEMENT THICKNESS | STREETS | S - 1 | 2/6/17

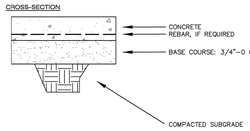

THICKNESS

	ON-STREET PARKING BAYS	ALLEYS AND WOONERFS	MAINTENANCE ACCESS ROADS	COMMERCIAL DRIVEWAYS	RESIDENTIAL DRIVEWAYS	SIDEWALK AND MULTI-USE PATHS
CONCRETE	6"	6"	6"	8"	6"	4"
REBAR	NO	NO	NO	YES	NO	NO
BASE COURSE	6"	8"	6"	4"	4"	4"

NOTE:

1. CONCRETE SHALL BE 4000 PSI, 28 DAY STRENGTH EXCEPT RESIDENTIAL DRIVEWAYS, SIDEWALKS AND MULTI-USE PATHS WHERE THE CONCRETE STRENGTH SHALL BE 3,300 PSI, 28-DAY.
2. SUBGRADE COMPACTED TO 95% AASHTO T-99
3. WHEREVER SIDEWALK CROSSES A ROADWAY, ALLEY, OR DRIVEWAY, THE ROADWAY CROSS-SECTION SHALL PREVAIL.

Cornelius Oregon's Family Town | CONCRETE PAVEMENT THICKNESS | STREETS | S - 2 | 3/17/17

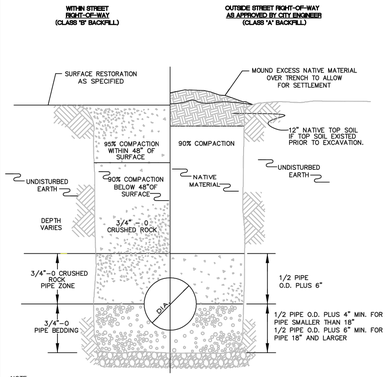

NOTE:

1. ALL COMPACTION REQUIREMENTS PER AASHTO T-99 AND ODOT APWA SPEC 00405.
2. TRENCH STABILIZATION: IF REQUIRED, TRENCH STABILIZATION SHALL BE SPECIFIED SEPARATELY AND PLACED PRIOR TO PLACEMENT OF BEDDING MATERIAL.
3. THE TRENCH WIDTH AT THE GROUND SURFACE SHALL BE KEPT TO THE MINIMUM NECESSARY TO INSTALL THE PIPE IN A SAFE MANNER.
4. THE MINIMUM WIDTH IN THE PIPE ZONE SHALL PROVIDE A CLEAR WORKING SPACE OF AT LEAST SIX INCHES OUTSIDE THE OUTSIDE DIAMETER OF THE PIPE BEING INSTALLED.
5. IN ALL CASES, TRENCHES SHALL BE OF SUFFICIENT WIDTH TO ALLOW FOR SHORING, PROPER JOINING OF PIPE, AND BACKFILLING OF MATERIAL ALONG THE SIDES OF THE PIPE.
6. TRACER WIRE SHALL BE PLACED ABOVE NON-METALLIC PIPE, EXCEPT WHERE SECTIONS BETWEEN STRUCTURES (MANHOLES AND CATCH BASINS) ARE STRAIGHT.

Cornelius Oregon's Family Town | TRENCH BACKFILL | STREETS | S - 3 | 10/17/19

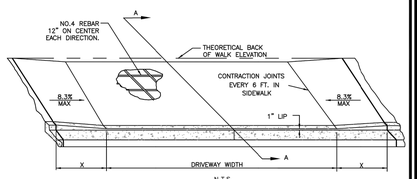

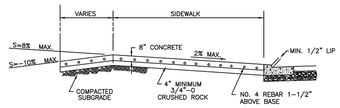

SECTION A-A
N.T.S.

NOTES:

1. CALL PUBLIC WORKS (503) 357-3011 FOR FORM INSPECTION AT LEAST 24 HRS. PRIOR TO PLACEMENT.
2. DRIVEWAY APPROACH MUST EXTEND TO BACK OF RIGHT-OF-WAY (R/W).
3. CONCRETE SHALL HAVE A MINIMUM BEARING STRENGTH OF 4000 PSI AFTER 28 DAYS.
4. REBAR TO BE SUPPORTED ON 1-1/2" BLOCKS.
5. DIMENSION "X" IS TYPICALLY 6 FEET WITH A 6 INCH HIGH CURB. THE CRITICAL DIMENSION FOR THE WING IS THE 8.3% MAXIMUM SLOPE TO MEET A.D.A. STANDARDS.

Cornelius Oregon's Family Town | COMMERCIAL DRIVEWAY WITH CURB-TIGHT SIDEWALK | STREETS | S - 21 | 7/18/16

FINISHING NOTES:

1. ALL SIDEWALKS SHALL HAVE A BROOMED SURFACE UNLESS OTHERWISE SPECIFIED.
2. FINISHED SURFACES SHALL BE FREE FROM HUMPS, SAGS, OR OTHER IRREGULARITIES.
3. ALL SURFACES SHALL BE BROOMED TRANSVERSE TO THE DIRECTION OF TRAFFIC.
4. THE EDGES SHALL BE FINISHED WITH A 3" SHINE ON ALL SIDES AS SHOWN BELOW.

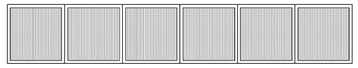

INSPECTION NOTES:

1. ALL SIDEWALK FORMS ARE TO BE INSPECTED BY THE PUBLIC WORKS INSPECTOR TWICE. ONCE PRIOR TO PLACING, TO CHECK FORMS, AND AGAIN AFTER POURING TO ENSURE CONFORMANCE TO FINISHING SPECIFICATIONS.
2. INSPECTION REQUESTS MUST BE MADE AT LEAST 24 HOURS IN ADVANCE BY CONTACTING PUBLIC WORKS.
3. IF FORMS ARE NOT INSPECTED AND APPROVED OR FINISH WORK IS SUBSTANDARD, THE INSPECTOR SHALL REQUIRE THE CONCRETE BE REMOVED AND REPLACED.

Cornelius Oregon's Family Town | SIDEWALK FINISHING | STREETS | S - 25 | 7/18/16

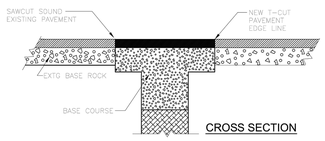

NOTES:

1. SAWCUT EXISTING PAVEMENT TO FULL DEPTH.
2. CITY STREETS SHALL BE RESTORED TO THE PAVEMENT AND BASE THICKNESS AND DESIGN IDENTIFIED FOR THAT TYPE OF STREET IN THESE STANDARDS.
3. HWY 8 PAVEMENT RESTORATION WILL BE DICTATED BY ODOT.
4. ALL CUT EDGES OF AC SHALL BE SAND SEALED WITH CRS-1 OR CRS-2 EMULSIFIED ASPHALT OR EQUAL.
5. IF NEW EDGE OF PAVEMENT IS LESS THAN THREE FEET FROM ANOTHER PATCH, CURB OR EDGE OF STREET, REPLACE THE PAVEMENT IN BETWEEN, IF REQUIRED BY CITY ENGINEER.
6. IF ANY PART OF MORE THAN ONE PRE-EXISTING PATCH EDGE IS WITHIN 3 FEET OF THE T-CUT, THE PAVEMENT TO THE FAR EDGE OF THE FURTHEST PRE-EXISTING PATCH SHALL BE REMOVED AND RESTORED.
7. ON LONGITUDINAL PAVEMENT CUTS, THE EDGE OF THE T-CUT SHALL NOT LIE IN A WHEEL PATH.
8. IF AN EDGE OF A T-CUT IS WITHIN 5 FEET OR LESS OF AN AREA OF DISTRESSED EXISTING PAVEMENT, THE LENGTH AND WIDTH OF THE PAVEMENT RESTORATION MAY BE MODIFIED BY THE CITY ENGINEER TO ENSURE THE INTEGRITY OF THE PAVEMENT RESTORATION.
9. THE WIDTH FROM EDGE OF TRENCH SHALL BE 6 INCHES MINIMUM FOR TRENCHES THAT ARE 12 INCHES WIDE OR LESS AND 12 INCHES MINIMUM FOR TRENCHES WIDER THAN 12 INCHES. THE CITY ENGINEER MAY INCREASE THE WIDTH UP TO 10 FEET ON BOTH SIDES OF THE PAVEMENT CUT IF NEEDED TO ENSURE LONG-TERM INTEGRITY OF THE PAVEMENT.

Cornelius Oregon's Family Town | ASPHALT PAVEMENT CUT RESTORATION | STREETS | S - 4 | 7/18/16

DRAFT DESIGN

MILDREN DESIGN GROUP
ARCHITECTURE | INTERIORS
4875 SW Griffith Drive Suite 300
Beaverton OR, 97005
(503) 244-0552

REGISTERED PROFESSIONAL ENGINEER
PRELIMINARY NOT FOR CONSTRUCTION
08/09/2022
RENEWS: 6-30-2023

WDY Structural Civil Engineers
6443 SW Beaverton-Hillsdale Hwy, suite 210 Portland, OR 97221
ph:503.203.8111 fx:503.203.8122 www.wdy.com

Client/ Owner:

ALTABIRD INVESTMENTS

Project:

ALTABIRD INVESTMENTS CORNELIUS

TENTH AVENUE INDUSTRIAL CENTER
Lot:13-16, CORNELIUS
OR, 97113

Sheet Title:

JURISDICTIONAL DETAILS

Revisions:

#	Description	Date

MILDREN DESIGN GROUP, P.C., 2022. ALL RIGHTS RESERVED ©

THESE DRAWINGS ARE THE PROPERTY OF MILDREN DESIGN GROUP, P.C., AND ARE NOT TO BE USED OR REPRODUCED IN ANY MANNER, EXCEPT WITH THE PRIOR WRITTEN PERMISSION OF MILDREN DESIGN GROUP, P.C.

Date: 2022-04-26
Drawn by: JR
Checked by: KK
Job Number: 122013
Sheet

C4.0

FILE: 22120_C4.0.DWG JURISDICTIONAL DETAILS 8/9/2022 10:55:43 AM — KUBOYAMA

PLANT LIST:

SYMBOL	QTY.	LATIN NAME / Common Name	SIZE	SPACING
		STREET TREES		
	9	CERCIS CANADENSIS Eastern Redbud	2" cal.	As shown
	9	CORNUS 'EDDIE'S WHITE WONDER' Eddie's White Wonder Dogwood	2" cal.	As shown
	7	GINKGO BILOBA 'SARATOGA' Saratoga Ginkgo	2" cal.	As shown
	6	ZELKOVA SERRATA 'SCHMIDTLOW' Wireless Zelkova	2" cal.	As shown
		SITE TREES		
	5	ACER CIRCINATUM Vine Maple	5'-6' ht. Multi-trunk	As Shown
	14	CARPINUS BETULUS 'FRANS FONTAINE' Frans Fontaine Hornbeam	2" cal.	As shown
	3	FRAXINUS OXYCARPA 'RAYWOOD' Raywood Ash	2" cal.	As shown
	6	PRUNUS SERRULATA 'MOUNT FUJI' Mount Fuji Flowering Cherry	2" cal.	As shown
	2	PSEUDOTSUGA MENZIESII Douglas Fir	6'-7' ht.	As shown
	15	ULMUS 'MORTON GLOSSY' Triumph Elm	2" cal.	As shown
		SHRUBS		
	36	ABELIA GRAND. "EDWARD GOUCHER" Edward Goucher Abelia	5 gal.	4' o.c.
	110	ABELIA X GRANDIFLORA 'LUCKY LOTS' Lucky Lots Abelia	2 gal.	3' o.c.
	43	BERBERIS THUN. 'CRIMSON PYGMY' Crimson Pygmy Japanese Barberry	2 gal.	3' o.c.
	50	CISTUS PURPUREUS Purple Rock Rose	5 gal.	3' o.c.
	34	CORNUS ALBA 'BAILHALO' Ivory Halo Dogwood	5 gal.	5' o.c.
	88	NANDINA DOMESTICA "MOON BAY" Moon Bay Nandina	2 gal.	3' o.c.
	278	ILEX GLABRA "COMPACTA" Compact Inkberry	2 gal.	3' o.c.
	17	JUNIPERUS CHINENSIS "HETZ'S COLUMN Hetz's Columnar Juniper	3'-4' ht.	5' o.c.
	33	PINUS MUGO 'SLOWMOUND' Slowmound Mugo Pine	5 gal.	4' o.c.
	156	SPIRAEA JAPONICA 'NEON FLASH' Neon Flash Spirea	2 gal.	3' o.c.
	15	VIBURNUM PLIC. TOMEN. 'MARIESII' Doublefile Viburnum	5 gal.	8' o.c.
	257	VIBURNUM TINUS 'SPRING BOUQUET' Spring Bouquet Viburnum	5 gal.	4' o.c.
		GRASSES		
	154	HELICTOTRICHON SEMPERVIRENS Blue Oat Grass	1 gal.	2' o.c.
	24	MISCANTHUS SIN. "GRACILLIMUS" Maiden Eulalia Grass	1 gal.	4' o.c.
		GROUNDCOVER		
	328	ARCTOSTAPHYLOS UVA-URSI "MASS." Massachusetts Kinnikinnick	1 gal.	3' o.c.
	251	EUONYMUS FORT. "GRACILIS VARIEGATA" Variegated Wintercreeper	1 gal.	3' o.c.
	490	LONICERA PILEATA Box Honeysuckle	1 gal.	5' o.c.
	590	MAHONA REPENS Creeping Oregon Grape	1 gal.	3' o.c.
		STORMWATER PLANTER PER THE CITY OF CORNELIUS STANDARDS		

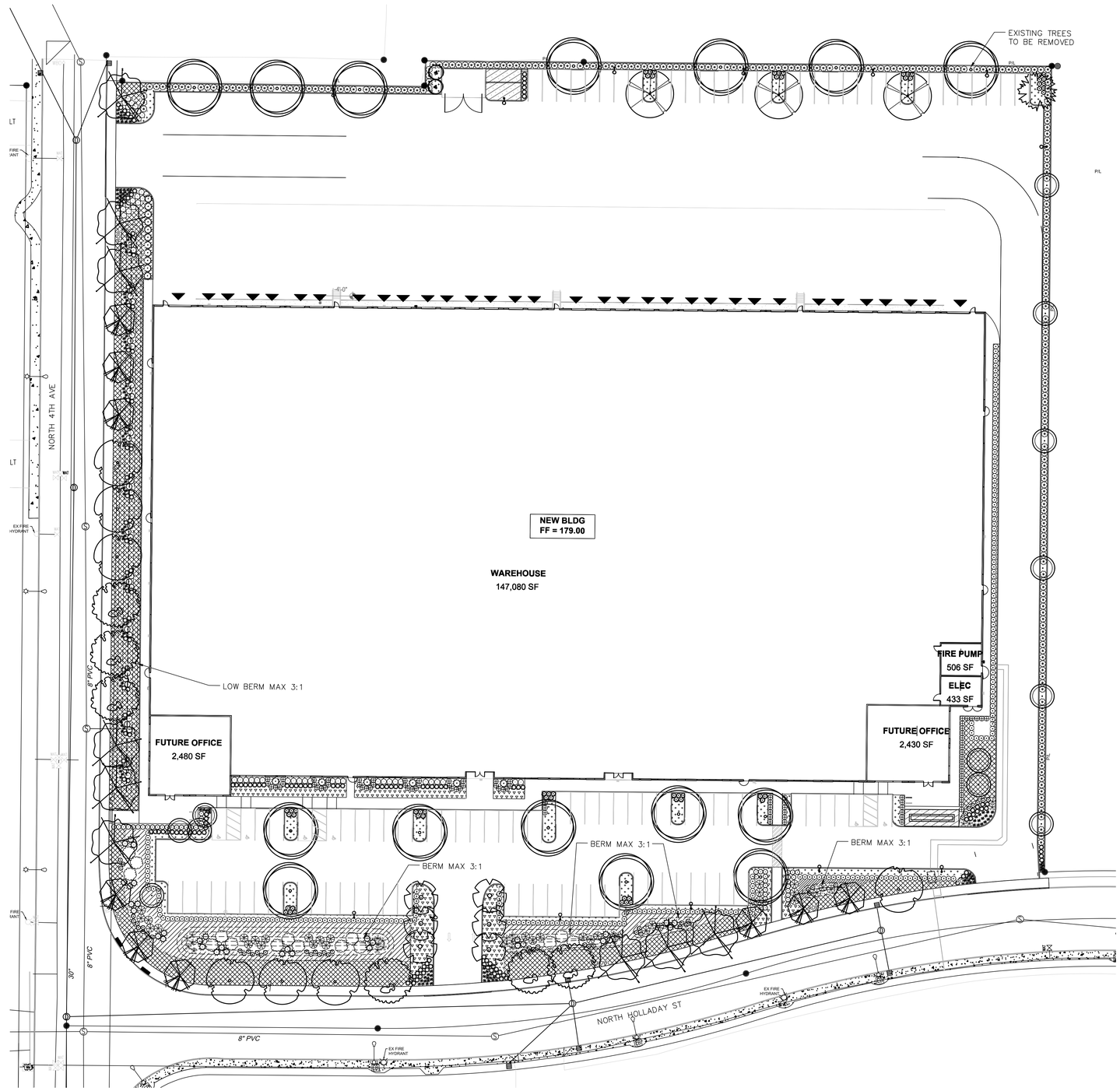

LANDSCAPE PLAN

1" = 30'-0"

GENERAL NOTES:

1. Contractor is to verify all plant quantities.
2. Adjust plantings in the field as necessary.
3. Project is to be irrigated by an automatic, underground system, which will provide full coverage for all plant material. System is to be design/ build by Landscape Contractor. Guarantee system for a minimum one year. Show drip systems as alternate bid only.
4. All plants are to be fully foliaged, well branched and true to form.
5. Contractor is to notify Landscape Architect or Owner's Representative of any site changes or unforeseen conditions that may be detrimental to plant health, or cause future problems to any structural elements of the project.

DESIGN REVIEW

MILDREN DESIGN GROUP

ARCHITECTURE | INTERIORS

4875 SW Griffith Drive Suite 300
Beaverton OR, 97005
(503) 244-0552

REGISTERED LANDSCAPE ARCHITECT
LA793
ERIN HOLSONBACK
ORE GON
8/16/2013
EXP. 5/31/23

OTTEN + ASSOCIATES
LANDSCAPE ARCHITECTURE

3933 South Kelly Avenue, Suite B
Portland, OR, 97239
(503) 972-0311
www.ottenla.com

Client/ Owner:

ALTABIRD INVESTMENTS

Project:

ALTABIRD INVESTMENTS CORNELIUS

TENTH AVENUE INDUSTRIAL CENTER
Lot:13-16, CORNELIUS
OR, 97113

Sheet Title:

LANDSCAPE PLAN

Revisions:

#	Description	Date

MILDREN DESIGN GROUP, P.C., 2022. ALL RIGHTS RESERVED ©

THESE DRAWINGS ARE THE PROPERTY OF MILDREN DESIGN GROUP, P.C., AND ARE NOT TO BE USED OR REPRODUCED IN ANY MANNER, EXCEPT WITH THE PRIOR WRITTEN PERMISSION OF MILDREN DESIGN GROUP, P.C.

Date: 2022-06-09

Drawn by: LH Checked by: EH

Author Checker

Job Number: 122013

Sheet

L1.0

OUTLINE SPECIFICATIONS PLANTING AND SEEDING:

GENERAL: All plants shall conform to all applicable standards of the latest edition of the "American Association of Nurserymen Standards", A.N.S.I. Z60.1 – 1973. Meet or exceed the regulations and laws of Federal, State, and County regulations, regarding the inspection of plant materials, certified as free from hazardous insects, disease, and noxious weeds, and certified fit for sale in Oregon.

The apparent silence of the Specifications and Plans as to any detail, or the apparent omission from them of a detailed description concerning any point, shall be regarded as meaning that only the best general practice is to prevail and that only material and workmanship of first quality are to be used. All interpretations of these Specifications shall be made upon the basis above stated.

Landscape contractor shall perform a site visit prior to bidding to view existing conditions.

PERFORMANCE QUALITY ASSURANCE: Use adequate numbers of skilled workmen who are thoroughly trained and experienced in the necessary horticultural practices and who are completely familiar with the specified requirements and methods needed for the proper performance of the work of this section.

NOTIFICATION: Give Landscape Architect minimum of 2 days advance notice of times for inspections. Inspections at growing site does not preclude Landscape Architect's right of rejection of deficient materials at project site. Each plant failing to meet the above mentioned "Standards" or otherwise failing to meet the specified requirements as set forth shall be rejected and removed immediately from the premises by the Contractor and at his expense, and replaced with satisfactory plants or trees conforming to the specified requirements.

SUBSTITUTIONS: Only as approved by the Landscape Architect or the Owner's Representative.

GUARANTEE AND REPLACEMENT: All plant material shall be guaranteed from final acceptance for one full growing season or one year, whichever is longer. During this period the Contractor shall replace any plant material that is not in good condition and producing new growth (except that material damaged by severe weather conditions, due to Owner's negligence, normally unforeseen peculiarities of the planting site, or lost due to vandalism). Guarantee to replace, at no cost to Owner, unacceptable plant materials with plants of same variety, age, size and quality as plant originally specified. Conditions of guarantee on replacement plant shall be same as for original plant.

Landscape Contractor shall keep on site for Owner's Representative's inspection, all receipts for soil amendment and topsoil deliveries.

PROTECTION Protect existing roads, sidewalks, and curbs, landscaping, and other features remaining as final work. Verify location of underground utilities prior to doing work. Repair and make good any damage to service lines, existing features, etc. caused by landscaping installation.

PLANT QUALITY ASSURANCE: Deliver direct from nursery. Maintain and protect roots of plant material from drying or other possible injury. Store plants in shade and protect them from weather immediately upon delivery, if not to be planted within four hours.

Nursery stock shall be healthy, well branched and rooted, formed true to variety and species, full foliaged, free of disease, injury, defects, insects, weeds, and weed roots. Trees shall have straight trunks, symmetrical tips, and have an intact single leader. Any trees with double leaders will be rejected upon inspection. All Plants: True to name, with one of each bundle or lot tagged with the common and botanical name and size of the plants in accordance with standards of practice of the American Association of Nurserymen, and shall conform to the Standardized Plant Names, 1942 Edition.

Container grown stock: Small container–grown plants, furnished in removable containers, shall be well rooted to ensure healthy growth. **Grow container plants in containers a minimum of one year** prior to delivery, with roots filling container but not root bound. Bare root stock: Roots well–branched and fibrous. Balled and burlapped (B&B): Ball shall be of natural size to ensure healthy growth. Ball shall be firm and the burlap sound. No loose or made ball will be acceptable.

TOPSOIL AND FINAL GRADES: Landscape Contractor is to supply and place 12" of topsoil in planting beds. Landscape Contractor is to verify with the General Contractor if the on–site topsoil is or is not conducive to proper plant growth. The topsoil shall be a sandy loam, free of all weeds and debris inimical to lawn or plant growth. Furnish soil analysis by a qualified soil testing laboratory stating percentages of organic matter; gradation of sand, silt and clay content; cation exchange capacity; deleterious material; pH; and plant nutrient content of the topsoil. Report suitability of topsoil for plant growth and recommended quantities of nitrogen, phosphorus and potash nutrients and soil amendments (including compost) to be added to produce satisfactory topsoil. If stockpiled topsoil on site is not conducive to proper plant growth, the Landscape Contractor shall import the required amount.

Landscaping shall include finished grades and even distribution of topsoil to meet planting requirements. Grades and slopes shall be as indicated. Planting bed grades shall be approximately 3" below adjacent walks, paving, finished grade lines, etc., to allow for bark application. Finish grading shall remove all depressions or low areas to provide positive drainage throughout the area.

PLANTING SPECIFICATIONS:

HERBICIDES: Prior to soil preparation, all areas showing any undesirable weed or grass growth shall be treated with Round–up in strict accordance with the manufacturer's instructions.

SOIL PREPARATION: Work all areas by rototilling to a minimum depth of 8". Remove all stones (over 1½" size), sticks, mortar, large clumps of vegetation, roots, debris, or extraneous matter turned up in working. Soil shall be of a homogeneous fine texture. Level, smooth and lightly compact area to plus or minus .10 of required grades.

In groundcover areas add 2" of compost (or as approved) and till in to the top 6" of soil.

PLANTING HOLE: Lay out all plant locations and excavate all soils from planting holes to 2 1/2 times the root ball or root system width. Loosen soil inside bottom of plant hole. Dispose of any "subsoil" or debris from excavation. Check drainage of planting hole with water, and adjust any area showing drainage problems.

SOIL MIX: Prepare soil mix in each planting hole by mixing:
2 part native topsoil (no subsoil)
1 part compost (as approved)

Thoroughly mix in planting hole and add fertilizers at the following rates:
Small shrubs – 1/8 lb./ plant
Shrubs – 1/3 to 1/2 lb./ plant
Trees – 1/3 to 1 lb./ plant

FERTILIZER: For trees and shrubs use Commercial Fertilizer "A" Inorganic (5–4–3) with micro–nutrients and 50% slow releasing nitrogen. DO NOT apply fertilizer to Stormwater Facilities.

PLANTING TREES AND SHRUBS: Plant upright and face to give best appearance or relationship to adjacent plants and structures. Place 6" minimum, lightly compacted layer of prepared planting soil under root system. Loosen and remove twine binding and burlap from top 1/2 of root balls. Cut off cleanly all broken or frayed roots, and spread roots out. Stagger Plants in rows. Backfill planting hole with soil mix while working each layer to eliminate voids.

When approximately 2/3 full, water thoroughly, then allow water to soak away. Place remaining backfill and dish surface around plant to hold water. Final grade should keep root ball slightly above surrounding grade, not to exceed 1". Water again until no more water is absorbed. Initial watering by irrigation system is not allowed.

STAKING OF TREES: Stake or guy all trees. Stakes shall be 2" X 2" (nom.) quality tree stakes with point. They shall be of Douglas Fir, clear and sturdy. Stake to be minimum 2/3 the height of the tree, not to exceed 8'–0". Drive stake firmly 1'–6" below the planting hole. Tree ties for deciduous trees shall be "Chainlock" (or better). For Evergreen trees use "Gro–Strait" Tree Ties (or a reinforced rubber hose and guy wires) with guy wires of a minimum 2 strand twisted 12 ga. wire. Staking and guying shall be loose enough to allow movement of tree while holding tree upright. Tree stakes shall be removed after one year.

MULCHING OF PLANTINGS: Mulch planting areas with dark, aged, medium grind fir or hemlock bark (aged at least 6 months) to a depth of 2" in ground cover areas and 2½" in shrub beds. Apply evenly, not higher than grade of plant as it came from the nursery, and rake to a smooth finish. Water thoroughly, then hose down planting area with fine spray to wash leaves of plants.

GENERAL MAINTENANCE: Protect and maintain work described in these specifications against all defects of materials and workmanship, through final acceptance. Replace plants not in normal healthy condition at the end of this period. Water, weed, cultivate, mulch, reset plants to proper grade or upright position, remove dead wood and do necessary standard maintenance operations. Irrigate when necessary to avoid drying out of plant materials, and to promote healthy growth.

CLEAN–UP: At completion of each division of work all extra material, supplies, equipment, etc., shall be removed from the site. All walks, paving, or other surfaces shall be swept clean, mulch areas shall have debris removed and any soil cleared from surface. All areas of the project shall be kept clean, orderly and complete.

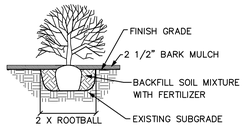

SHRUB PLANTING DETAIL
NOT TO SCALE

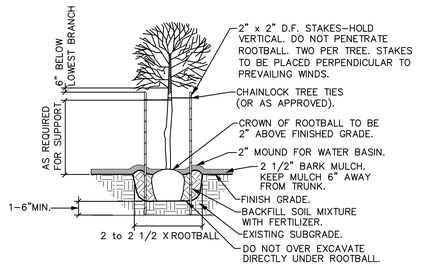

NOTE: ANY PROPOSED CHANGES TO OUR SPECIFICATION OR DETAIL SHOULD BE APPROVED BY THE LANDSCAPE ARCHITECT. LIKEWISE, IN ACCORDANCE WITH BEST PRACTICES OF LOCAL LANDSCAPE INSTALLATION, SHOULD THE LANDSCAPE CONTRACTOR FIND A PREFERRED ALTERNATE METHOD, THE LANDSCAPE ARCHITECT MAY BE SO ADVISED.

GENERAL DECIDUOUS TREE PLANTING DETAIL
NOT TO SCALE

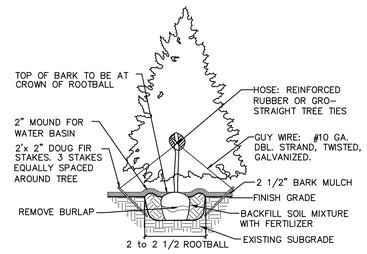

EVERGREEN TREE STAKING DETAIL
NOT TO SCALE

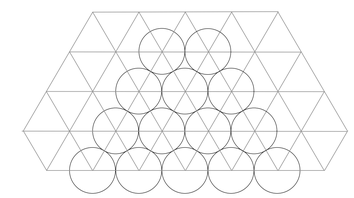

GROUNDCOVER PLANTING DETAIL
NOT TO SCALE

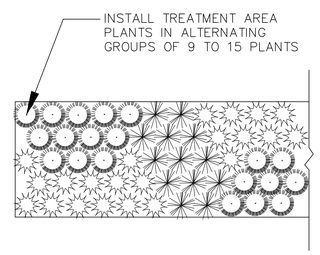

STORMWATER FACILITY PLANTING DETAIL
NOT TO SCALE

DESIGN REVIEW

MILDREN DESIGN GROUP
ARCHITECTURE | INTERIORS
4875 SW Griffith Drive Suite 300
Beaverton OR, 97005
(503) 244-0552

REGISTERED LANDSCAPE ARCHITECT
LA793
ERIN HOLSONBACK
OREGON
5/10/2013
EXP. 5/31/23

OTTEN + ASSOCIATES
LANDSCAPE ARCHITECTURE
3933 South Kelly Avenue, Suite B
Portland, OR, 97239
(503) 972-0311
www.ottenla.com

Client/ Owner:
ALTABIRD INVESTMENTS

Project:
ALTABIRD INVESTMENTS CORNELIUS

TENTH AVENUE INDUSTRIAL CENTER
Lot:13-16, CORNELIUS
OR, 97113

Sheet Title:
LANDSCAPE SPECIFICATIONS & DETAILS

Revisions:

#	Description	Date

MILDREN DESIGN GROUP, P.C., 2022, ALL RIGHTS RESERVED ©

THESE DRAWINGS ARE THE PROPERTY OF MILDREN DESIGN GROUP, P.C., AND ARE NOT TO BE USED OR REPRODUCED IN ANY MANNER, EXCEPT WITH THE PRIOR WRITTEN PERMISSION OF MILDREN DESIGN GROUP, P.C.

Date: 2022-06-09
Drawn by: LH Checked by: EH
Author Checker
Job Number: 122013
Sheet
L2.0

ABBREVIATIONS

ABBREVIATION	TERM
A/V	AUDIO VISUAL
AB	ANCHOR BOLT
AC	AIR CONDITIONING
ACDN	ACCORDION
ACP	ACOUSTICAL CEILING PANEL
ACST	ACOUSTICAL
ACT	ACOUSTICAL CEILING TILE
AD	AREA DRAIN
ADJ	ADJUST, ADJUSTABLE
AESS	ARCHITECTURALLY EXPOSED STRUCTURAL STEEL
AFF	ABOVE FINISH FLOOR
ALUM	ALUMINUM
AP	ASPHALTIC PAVING
APP	APPROXIMATELY
ARCH	ARCHITECTURAL
ASPH	ASPHALT
AUTO	AUTOMATIC
B #	BASE
BALC	BALCONY
BD	BOARD
BDRM	BEDROOM
BITUM	BITUMINOUS
BKR	BACKER
BL	BLINDS
BLDG	BUILDING
BLK	BLOCK
BLKG	BLOCKING
BLKT	BLANKET
BLT IN	BUILT-IN
BM	BEAM
BOC	BOTTOM OF CURB
BOT/BTM	BOTTOM
BOW	BOTTOM OF WALL
BRK	BRICK
BSMT	BASEMENT
BTR	BETTER
BU	BUILT-UP
C#	CARPET
C/W	CURTAIN WALL
CAB	CABINET
CB	CATCH BASIN
CC	CUBICLE CURTAIN
CEM	CEMENT, CEMENTITIOUS
CG	CORNER GUARD
CI	CAST IRON
CJ	CONTROL JOINT
CK TP	COOK TOP
CL	CENTER LINE
CLG	CEILING
CLO	CLOSER
CLOS	CLOSET
CLR	CLEAR
CNTR	COUNTER
COILG	COILING
COL	COLUMN
COMP	COMPOSITE, COMPENSATION
CONC	CONCRETE
COND	CONDITION
CONSTR	CONSTRUCTION
CONT	CONTINUOUS
CONTR	CONTRACTOR
CORR	CORRIDOR
CPT	CARPET
CTG	COATING
CTR	CENTER
CTRL	CONTROL
CTSK	COUNTERSINK
CTV	CABLE TV
CU	CUBIC
CUST	CUSTOM
CWK	CASEWORK
D/W	DISHWASHER
DAAC	DIRECT-APPLIED ACOUSTICAL CEILING
DBL	DOUBLE
DEC	DECORATIVE
DEFL	DEFLECTION
DEMO	DEMOLITION
DEPT	DEPARTMENT
DET	DETAIL
DIA	DIAMETER
DIM	DIMENSION
DIMP	DIMPLED PLASTIC
DKG	DECKING
DMFG	DAMPPROOFING
DS	DOWNSPOUT
DWG	DRAWING
DWR	DRAWER
(E)	EXISTING
EA	EACH
EF	EPOXY FLOORING, EACH FACE
ELEC	ELECTRICAL
ELEV	ELEVATOR
EMER	EMERGENCY
ENCL	ENCLOSURE
ENTR	ENTRANCE
EPS	EXPANDED POLYSTYRENE
EQ	EQUAL
EQPT	EQUIPMENT
ES	EACH SIDE
EW	EACH WAY
EWC	ELECTRIC WATER COOLER
EXIST	EXISTING
EXP	EXPANSION
EXPO	EXPOSED
EXT	EXTERIOR
F	FABRIC, FIBER
F FIN	FACTORY FINISH
FA	FIRE ALARM, FLUID APPLIED
FAB	FABRICATIONS
FB	FLAT BAR
FD	FLOOR DRAIN
FDN	FOUNDATION
FE	FIRE EXTINGUISHER
FEC	FIRE EXTINGUISHER CABINET
FF	FINISH FLOOR, FACTORY FINISH
FF SAM	FOIL FACED SELF-ADHERED MEMBRANE
FFAC	FIBER FACED ACOUSTICAL CEILING
FFE	FINISH FLOOR ELEVATION
FG	FULL GLASS
FGL	FIBERGLASS
FH	FLAT HEAD
FHC	FIRE HOSE CABINET
FIN	FINISH
FIXT	FIXTURE
FLDG	FOLDING
FLR	FLOOR
FLRG	FLOORING
FLSHG	FLASHING
FM	FRAME
FMD	FORMED
FOC	FACE OF CONCRETE
FOF	FACE OF FINISH
FOIC	FURNISHED BY OWNER INSTALLED BY CONTRACTOR
FOIO	FURNISHED BY OWNER INSTALLED BY OWNER
FOM	FACE OF MASONRY
FOS	FACE OF STUD
FP	FIREPROOF
FPFG	FIREPROOFING
FR	FIRE RATED, FIRE RESISTIVE
FRM	FRAMED, FRAMING

ABBREVIATIONS

ABBREVIATION	TERM
FRT	FIRE RETARDANT TREATED
FS	FULL SIZE, FIRESTOP
FT	FOOT, FEET
FTG	FOOTING
FURRG	FURRING
FUT	FUTURE
GA	GAUGE
GALV	GALVANIZED
GB	GRAB BAR
GBATH	GUEST BATH
GBDRM	GUEST BEDROOM
GD	GARBAGE DISPOSAL
GFRG	GLASS FIBER REINFORCED GYPSUM
GI	GALVANIZED IRON
GL	GLASS
GLB	GLU-LAMINATED BEAM
GND	GROUND
GR	GRADE
GYP	GYPSUM
HB	HOSE BIBB
HC	HOLLOW CORE
HCP	HOLLOW CORE PLANK
HDBD	HARDBOARD
HDW	HARDWARE
HDWD	HARDWOOD
HM	HOLLOW METAL
HORIZ	HORIZONTAL
HR	HOUR
HT	HEIGHT
HT SAM	HIGH TEMPERATURE SELF-ADHERED MEMBRANE
ICF	INSULATED CONCRETE FORMS
ID	INSIDE DIAMETER
IFS	INSULATION FINISH SYSTEM
IN	INCH, INCHES
INSUL	INSULATION
INT	INTERIOR
INTG	INTEGRATED
INTUM	INTUMESCENT
JAN	JANITOR
JST	JOIST
JT	JOINT, JOINTS
L	LINEN
LAM	LAMINATE
LAV	LAVATORY
LF	LINEAL FEET, LINEAR FOOTAGE
LIB	LIBRARY
LIN	LINEAR
LIN FT	LINEAL FEET
LKR	LOCKER
LP	LIME PLASTER
LT	LIGHT
LV	LIVING
LVR	LOUVER
MACH	MACHINE
MAINT	MAINTENANCE
MAX	MAXIMUM
MB	MACHINE BOLT
MBATH	MASTER BATHROOM
MBDRM	MASTER BEDROOM
MC	MEDICINE CABINET
MCP	MODIFIED CEMENT PLASTER
MDF	MEDIUM DENSITY FIBERBOARD
MDO	MEDIUM DENSITY OVERLAY
MECH	MECHANICAL
MED	MEDICATION. MEDICAL
MEMB	MEMBRANE
MFR	MANUFACTURER
MH	MANHOLE
MIN	MINIMUM
MIRR	MIRROR
MISC	MISCELLANEOUS
MO	MASONRY OPENING
MR	MOISTURE RESISTANT
MTD	MOUNTED
MTL	METAL
MUL	MULLION
MW	MICROWAVE
NC	NON COMBUSTIBLE
NIC	NOT IN CONTRACT
NO	NUMBER
NOM	NOMINAL
NTS	NOT TO SCALE
OBS	OBSCURE
OC	ON CENTER
OD	OUTSIDE DIAMETER
OFF	OFFICE
OH	OVERHEAD
OPNG	OPENING
OPP	OPPOSITE, OPPOSITE HAND
ORN	ORNAMENTAL
OZ	OUNCE
P	PAINT
P/L	PROPERTY LINE
PAN	PANTRY
PC	PRECAST
PCTF	PORTLAND CEMENT TERRAZZO FLOORING
PDRM	POWDER ROOM
PED	PEDESTRIAN
PERF	PERFORATED
PGRG	POLYMER GLASS FIBER REINFORCED GYPSUM
PH	PENTHOUSE
PKG	PACKAGE
PKGAR	PARKING GARAGE
PL	PLATE
PL-#	PLASTIC LAMINATE (PLAM)
PLAST	PLASTER, PLASTIC
PNL	PANEL
POL	POLISHED
POLYISO	POLYISOCYANURATE
PP	POWER POLE
PR	PAIR
PREFIN	PREFINISHED
PREM	PREMIUM
PRKG	PARKING
PROP	PROPERTY
PRT BD	PARTICLE BOARD
PSI	POUNDS PER SQUARE INCH
PT	PRESERVATIVE TREATED, POST-TENSIONED
PTD	PAPER TOWEL DISPENSER
PTD/R	PAPER TOWEL DISPENSER AND RECEPTACLE
PTN	PARTITION
PTR	PAPER TOWEL RECEPTACLE
PWD	PLYWOOD
R	RISER, RISERS
RAD	RADIUS
RB	RUBBER BASE
RCP	REFLECTED CEILING PLAN
RD	ROOF DRAIN
REF	REFERENCE
REFR	REFRIGERATOR
REHAB	REHABILITATION
REINF	REINFORCED, REINFORCING
REQ	REQUIREMENTS, REQUIRED
RES	RESIN

ABBREVIATIONS

ABBREVIATION	TERM
RESIL	RESILIENT
RF	RESILIENT FLOORING
RFG	ROOFING
RG	RANGE
RH	ROBE HOOK
RLG	RAILING
RM	ROOM
RO	ROUGH OPENING
RR	REST ROOM
RU	RESILIENT URETHANE
S&R	STILE AND RAIL
S&V	STAIN AND VARNISH
S/S	SERVICE SINK
SAM	SELF-ADHERED MEMBRANE
SBS	STYRENE BUTADIENE STYRENE
SC	SEALED CONCRETE, SOLID CORE
SCD	SEAT COVER DISPENSER
SCHED	SCHEDULE
SCRN	SCREEN
SD	SOAP DISPENSER
SDG	SIDING
SECT	SECTION, SECTIONAL
SF	SQUARE FEET, STOREFRONT
SG	SAFETY GLASS
SGL	SINGLE
SH	SHINGLES
SHOT	SHOTCRETE
SHT	SHEET
SHTG	SHEATHING
SHWR	SHOWER
SIM	SIMILAR
SIMU	SIMULATED
SKLT	SKYLIGHT
SLDG	SLIDING
SLNT	SEALANT
SND	SANITARY NAPKIN DISPENSER
SNR	SANITARY NAPKIN RECEPTACLE
SOG	SLAB ON GRADE
SQ	SQUARE
SS	STAINLESS STEEL
SS#	SOLID SURFACE
ST	STONE
ST SM	STANDING SEAM
STD	STANDARD
STL	STEEL
STN	STAIN
STOR	STORAGE
STR	STAIR, STAIRS
STRUCT	STRUCTURAL
SUSP	SUSPENDED
SV	SHEET VINYL
SYM	SYMMETRICAL
SYS	SYSTEM
T	TREAD, TREADS
T#	TILE
T&B	TOP AND BOTTOM
T&G	TONGUE AND GROOVE
T&M	TIME AND MATERIALS
TB	TACK BOARD, TOWEL BAR
TEL	TELEPHONE
TF	TERRAZZO FLOORING
THK	THICK
THRES	THRESHOLD
TMPD	TEMPERED
TOC	TOP OF CURB
TOPL	TOP OF PLATE
TOPV	TOP OF PAVEMENT
TOW	TOP OF WALL
TPD	TOILET PAPER DISPENSER
TR	TOILET ROOM
TRAF	TRAFFIC
TRANSL	TRANSLUCENT
TU	TILT-UP
TV	TELEVISION
TYP	TYPICAL
UNDLY	UNDERLAYMENT
UNF	UNFINISHED
UNO	UNLESS NOTED OTHERWISE
UR	URINAL
UTIL	UTILITY
VCT	VINYL COMPOSITION TILE
VEG	VEGETATED
VEHIC	VEHICULAR
VERT	VERTICAL
VEST	VESTIBULE
VFY	VERIFY
VG	VERTICAL GRAIN
VNR	VENEER
VP	VENEER PLASTER
VR	VAPOR RETARDER
W/	WITH
W/H	WATER HEATER
W/O	WITHOUT
WC	WALLCOVERING, WATER CLOSET
WD	WOOD
WDW	WINDOW
WF	WOOD FLOORING
WH	WALL HUNG
WP	WATERPROOF
WPFG	WATERPROOFING
WR	WATER RESISTANT, WATER RESISTIVE
WRB	WEATHER RESISTIVE BARRIER
WS	WATERSTOP
WT	WATERTIGHT
WT	WEIGHT
WW	WINDOW WALL
WWF	WOVEN WIRE FABRIC
XPS	EXTRUDED POLYSTYRENE
YD	YARD

TAGS

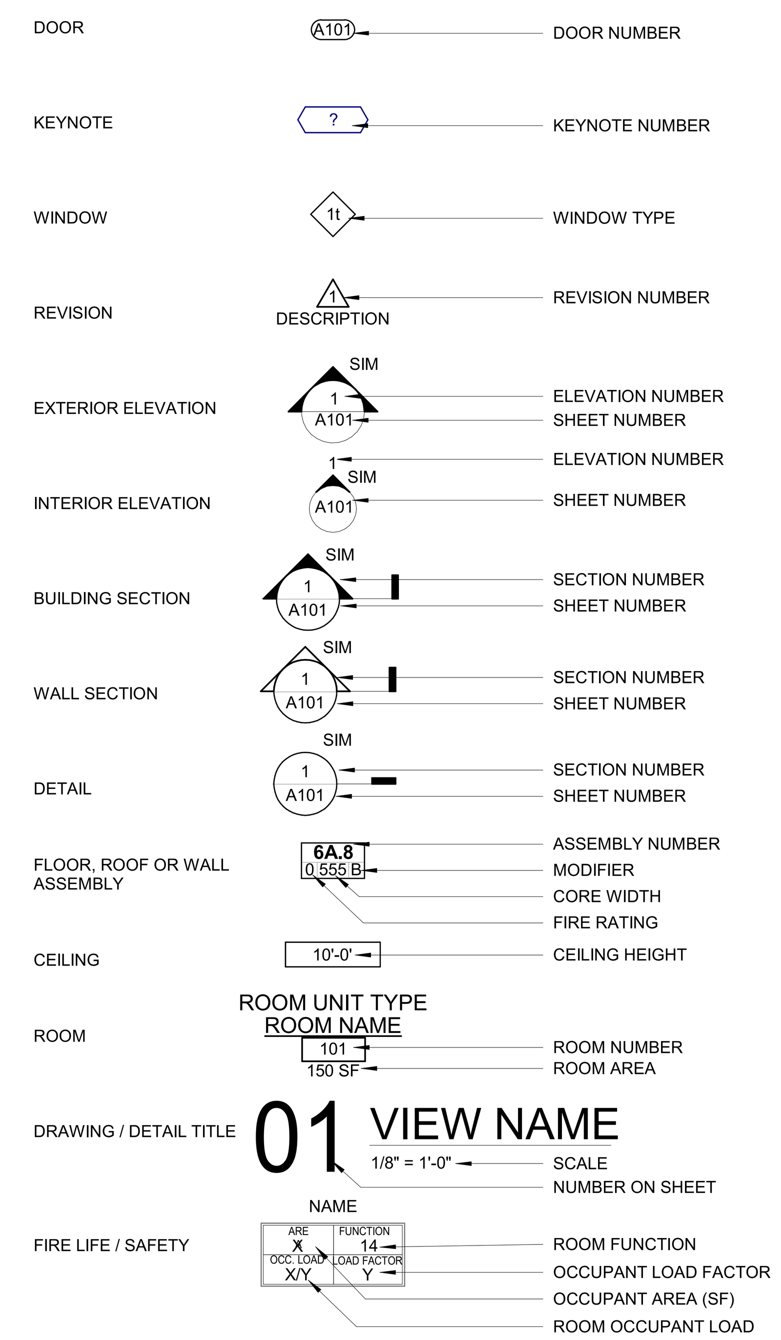

MATERIALS

DIVISION 03
- CONCRETE

DIVISION 04
- BRICK VENEER
- CMU

DIVISION 05
- ALUMINUM
- STEEL

DIVISION 06
- PLYWOOD
- MOISTURE RESISTANT SHEATHING
- SAWN LUMBER: CONTINUOUS
- SAWN LUMBER: BLOCKING
- FINISH LUMBER
- GLUE LAMINATED BEAM/ COLUMN

DIVISION 07
- BATT INSULATION
- RIGID BOARD INSULATION
- MINERAL FIBER INSULATION
- FOAMED-IN-PLACE INSULATION
- BACKER ROD AND SEALANT

DIVISION 09
- GYPSUM WALLBOARD

SYMBOLS

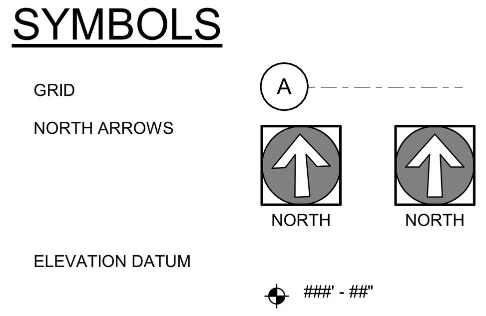

PROJECT NOTES

GENERAL
1. THESE DRAWINGS AND THE ACCOMPANYING SPECIFICATIONS ARE THE PROPERTY OF MILDREN DESIGN GROUP AND SHALL NOT BE COPIED OR REUSED FOR ANY OTHER PROJECT.
2. CONSTRUCTION DRAWINGS AND SPECIFICATIONS ARE COMPLEMENTARY, AND WHAT IS CALLED FOR BY EITHER WILL BE BINDING AS IF CALLED FOR BY ALL. PROVIDE WORK SHOWN OR REFERRED TO ON ONE SET OF DRAWINGS AS THOUGH SHOWN ON ALL RELATED DRAWINGS.
3. THE SPECIFICATIONS CONTAIN PERTINENT DETAILED INFORMATION ABOUT EACH BUILDING COMPONENT; THEY ARE A PART OF THE CONTRACT DOCUMENTS AND MUST BE USED IN CONJUNCTION WITH THE DRAWINGS.
4. NO BUILDING COMPONENT SHOWN ON THESE DRAWINGS SHALL BE INCORPORATED INTO THE WORK UNTIL SHOP DRAWINGS, SAMPLES, BROCHURES OR OTHER SUBMITTALS CALLED FOR IN THE SPECIFICATIONS HAVE BEEN REVIEWED AND APPROVED BY THE ARCHITECT.
5. VERIFY SITE CONDITIONS AND REPORT ANY DISCREPANCIES TO THE ARCHITECT BEFORE PROCEEDING WITH CONSTRUCTION.
6. COORDINATE THE WORK OF DELEGATED DESIGNERS WITH THE WORK OF OTHER TRADES.
7. WOOD IN CONTACT WITH CONCRETE SHALL BE PRESERVATIVE-TREATED.
8. CONCEALED WOOD USED IN TYPE I AND TYPE II CONSTRUCTION SHALL BE FIRE RETARDANT TREATED
9. FASTENERS IN CONTACT WITH TREATED WOOD SHALL BE CORROSION RESISTANT.
10. PROVIDE BLOCKING OR OTHER CONCEALED SUPPORTS WITHIN WALLS AS REQUIRED FOR HANDRAILS, CASEWORK, GRAB BARS, ART WORK, SHELVING, AND OTHER APPLIED WALL MOUNTED FIXTURES, FINISHES OR EQUIPMENT.
11. REFER TO MECHANICAL, PLUMBING, AND ELECTRICAL DRAWINGS FOR ACCESS DOOR LOCATIONS.

DIMENSIONS
1. DO NOT SCALE THE DRAWINGS. WRITTEN DIMENSIONS GOVERN.
2. DO NOT ADJUST CLEAR DIMENSIONS WITHOUT APPROVAL OF THE ARCHITECT.
3. DIMENSIONS ARE MEASURED FROM GRID LINES, PROPERTY LINES, FACE OF CONCRETE, FACE OF MASONRY, CENTERLINE OF STUD OR CENTERLINE OF THE AIR GAP (AT DOUBLE STUD ROW WALLS) UNLESS OTHERWISE NOTED.
4. DIMENSIONS NOTED AS ‘CLEAR’ OR ‘INSIDE CLEAR’ ARE MEASURED FROM THE FACE OF THE DEEPEST PROTRUSION FROM THE WALL SURFACE (CASEWORK, FIXTURE, BASE, HANDRAIL, WAINSCOT, TRIM, ETC.)
5. NOTES TO ‘ALIGN’ REFER TO FINISHED FACE OF INDICATED SURFACES.
6. LOCATE FACE OF HINGE SIDE DOOR JAMBS 4” AWAY FROM ADJACENT WALL UNLESS NOTED OTHERWISE
7. ‘FLOOR LINE’ ‘FLOOR’ OR ‘FLOOR LEVEL ‘REFER TO TOP OF CONCRETE SLAB OR TOP OF CEMENTITIOUS UNDERLAYMENT; FINISH FLOORING IS INSTALLED ABOVE THE FLOOR LINE.
8. ‘FINISH FLOOR’ REFERS TO THE TOP OF FLOORING.
9. ALIGN CENTER OF CLOSET DOORS WITH THE CENTER OF CLOSET WALL IN WHICH THEY OCCUR, UNLESS NOTED OTHERWISE.
10. RESIDENTIAL CLOSETS ARE 24” MAXIMUM DEPTH UNLESS NOTED OTHERWISE. WING WALLS ADJACENT TO CASEWORK SHALL PROJECT 2" BEYOND FINISHED COUNTER EDGE, UNLESS NOTED OTHERWISE.

ACCESSIBILITY
1. REFER TO SHEETS STARTING AT A5.01 FOR SPECIFIC ACCESSIBILITY REQUIREMENTS PERTAINING TO OUTLET LOCATIONS AND HEIGHTS, SWITCH LOCATIONS AND HEIGHTS, GRAB BARS, WALL BLOCKING, FLOOR CLEARANCES, COUNTERTOP HEIGHTS, LOCATION OF PLUMBING CONTROLS, ETC.
2. CHANGES IN FINISH FLOOR ELEVATION IN EXCESS OF 1/4", MEASURED FROM LOWEST POINT ON EITHER SIDE OF THRESHOLD TO HIGHEST POINT ON THRESHOLD, SHALL BE BEVELED AT 1:2. IN NO CASE SHALL FLOOR TRANSITIONS AND CHANGES IN LEVEL IN FLOOR SURFACE BE MORE THAN 1/4” MAX IN VERTICAL HEIGHT.

SIGNAGE
1. PROVIDE EXIT SIGNAGE IN ACCORDANCE WITH OSSC 1013.
2. PROVIDE ACCESSIBILITY SIGNAGTE IN ACCORDANCE WITH OSSC 1111.
3. PROVIDE CODE-REQUIRED ‘IN CASE OF FIRE…’ SIGNAGE AT ELEVATOR CALL STATIONS.
4. IDENTIFY ALL FIRE-RATED ENCLOSURES CONCEALED ABOVE CEILINGS USING MIN. 3” HIGH RED LETTERING READING: ‘FIRE AND/OR SMOKE BARRIER – PROTECT ALL OPENINGS’.
5. AT ROOMS WITH AN OCCUPANT LOAD OF 50 OR GREATER, SIGNAGE WITH THE MAXIMUM ALLOWABLE OCCUPANT LOAD SHALL BE POSTED AT THE MAIN ENTRANCE TO THE ROOM.
6. PROVIDE SIGNAGE IN EXIT STAIRWAYS AS FOLLOWS:
   a. AT EACH FLOOR LANDING IN BUILDING GREATER THAN 3 STORIES
   b. A SIGN INDICATING IF THE STAIR PROVIDES ROOF ACCESS
   c. AT LANDINGS OF STAIRS WITH MULTIPLE DOORS, INDICATE ANY DOOR WITH DIRECT ACCESS TO AN ENCLOSED ELEVATOR LOBBY

HORIZONTAL AND VERTICAL ASSEMBLIES
1. REFER TO STRUCTURAL DRAWINGS FOR LOCATIONS OF, AND ADDITIONAL REQUIREMENTS FOR LOAD-BEARING AND SHEAR WALLS.
2. STUD SIZE AND CORE THICKNESSES ARE INDICATED ON THE ASSEMBLY TYPE TAGS ON THE DRAWINGS; REFER TO THE TAG LEGEND ON SHEET A0.01.
3. GYPSUM WALLBOARD IS 5/8” TYPE ‘X’ UNLESS NOTED OTHERWISE.
4. WEATHER-RESISTIVE BARRIERS AND/OR VAPOR RETARDERS DESIGNATED AS “AB” ALSO FUNCTION AS AIR BARRIERS. SEAL ALL EDGES, INTERSECTIONS AND LAPS, TO CREATE AN AIR-TIGHT ENCLOSURE
5. FIRE RATED ASSEMBLIES: SEAL ALL EDGES AND INTERSECTIONS WITH FIRE CAULKING; COVER ALL RECESSED DEVICES WITH FIRE PROTECTIVE COVERINGS TO MEET THE REQUIREMENTS OF THE LISTING SOURCE AND AUTHORITY HAVING JURISDICTION (AHJ). INSTALL ALL MATERIALS IN STRICT ACCORDANCE WITH THE PUBLISHED REQUIREMENTS OF THE LISTING SOURCE, INCLUDING BUT NOT LIMITED TO: STUD GAGE AND SPACING, FASTENER SIZE AND SPACING, ORIENTATION OF GYPSUM WALLBOARD, OFFSETS OF JOINTS BETWEEN ADJACENT LAYERS OR OPPOSITE SIDES OF WALL, BRIDGING AND CROSS BRACING.
6. FIRE RATING AGENCY REQUIREMENTS INDICATE THE MINIMUM NEEDED TO ACHIEVE FIRE RATING; ADDITIONAL LAYERS, OR THICKER LAYERS, OF GYPSUM WALLBOARD OR SHEATHING MAY BE SHOWN TO MEET OTHER PROJECT REQUIREMENTS.
7. SEAL AND OTHERWISE PROTECT PENETRATIONS THROUGH FIRE-RATED CONSTRUCTION USING APPROVED FIRESTOPPING SYSTEMS TO MAINTAIN THE FIRE RATING OF THE ASSEMBLY BEING PENETRATED.
8. USE ACOUSTICALLY RATED FIRE SEALANT WHEREVER FIRE RATED CONSTRUCTION IS ALSO ACOUSTICALLY RATED.
9. SEAL PENETRATIONS THROUGH ACOUSTICALLY-RATED CONSTRUCTION TO MAINTAIN THE ACOUSTICAL RATING OF THE ASSEMBLY BEING PENETRATED.
10. SEAL PENETRATIONS IN ACOUSTICALLY RATED WALLS. WRAP BACKS OF ALL RECESSED DEVICES WITH ACOUSTIC PADS RATED FOR THE ASSEMBLY.
11. PROVIDE WATERSTOPS AT COLD JOINTS IN BELOW GRADE CONCRETE ASSEMBLIES AT THE EXTERIOR WALLS OF THE BUILDING.
12. PROVIDE DEFLECTION COMPENSATION AT TOP OF WALLS SECURED TO THE UNDERSIDE OF CONCRETE SLABS OR METAL DECK.
13. CONSTRUCT WALLS AND PARTITIONS SEPARATING DWELLING UNITS FROM EACH OTHER OR FROM PUBLIC AND SERVICE AREAS TO MEET STC 50 OR GREATER. REFER TO DRAWING A0.13 FOR ADDITIONAL REQUIREMENTS.
14. INSTALL FIREBLOCKING IN WALLS OF COMBUSTIBLE FRAMING AT THE CEILING AND FLOOR LEVELS AND AT MAX HORIZONTAL INTERVALS OF 10 FEET OR AS REQUIRED BY THE AHJ.
15. INSTALL FIREBLOCKING AT THE INTERSECTION OF COMBUSTIBLE WALLS AND HORIZONTAL ASSEMBLIES WITH CONCEALED SPACES OF AS REQUIRED BY THE AHJ.
16. INSTALL FIREBLOCKING IN STAIRS OF COMBUSTIBLE FRAMING IN CONCEALED SPACES BETWEEN STAIR STRINGERS AT THE TOP AND BOTTOM OF EACH RUN OR AS REQUIRED BY THE AHJ.
17. INSTALL FIREBLOCKING IN CONCEALED SPACES BEHIND EXTERIOR WALL COVERINGS OF COMBUSTIBLE MATERIALS AT MAX. 20 FOOT INTERVALS WITH NO CONCEALED SPACE EXCEEDING 100 SQUARE FEET OR AS REQUIRED BY THE AHJ.

MILDREN DESIGN GROUP

ARCHITECTURE | INTERIORS

4875 SW Griffith Drive Suite 300
Beaverton OR, 97005
(503) 244-0552

Client/ Owner:

ALTABIRD INVESTMENTS

Project:

ALTABIRD INVESTMENTS CORNELIUS

TENTH AVENUE INDUSTRIAL CENTER
Lot:13-16, CORNELIUS
OR, 97113

Sheet Title:

GENERAL NOTES

Revisions:

#	Description	Date

MILDREN DESIGN GROUP, P.C., 2022, ALL RIGHTS RESERVED ©

THESE DRAWINGS ARE THE PROPERTY OF MILDREN DESIGN GROUP, P.C., AND ARE NOT TO BE USED OR REPRODUCED IN ANY MANNER, EXCEPT WITH THE PRIOR WRITTEN PERMISSION OF MILDREN DESIGN GROUP, P.C.

Date: 2022-06-10

Drawn by: Author — Checked by: Checker

Job Number: 122013

Sheet

DESIGN REVIEW

A0.1

C:\Users\mm\Documents\122013 Cornelius Property_Central 2022_nangXEFFM.rvt

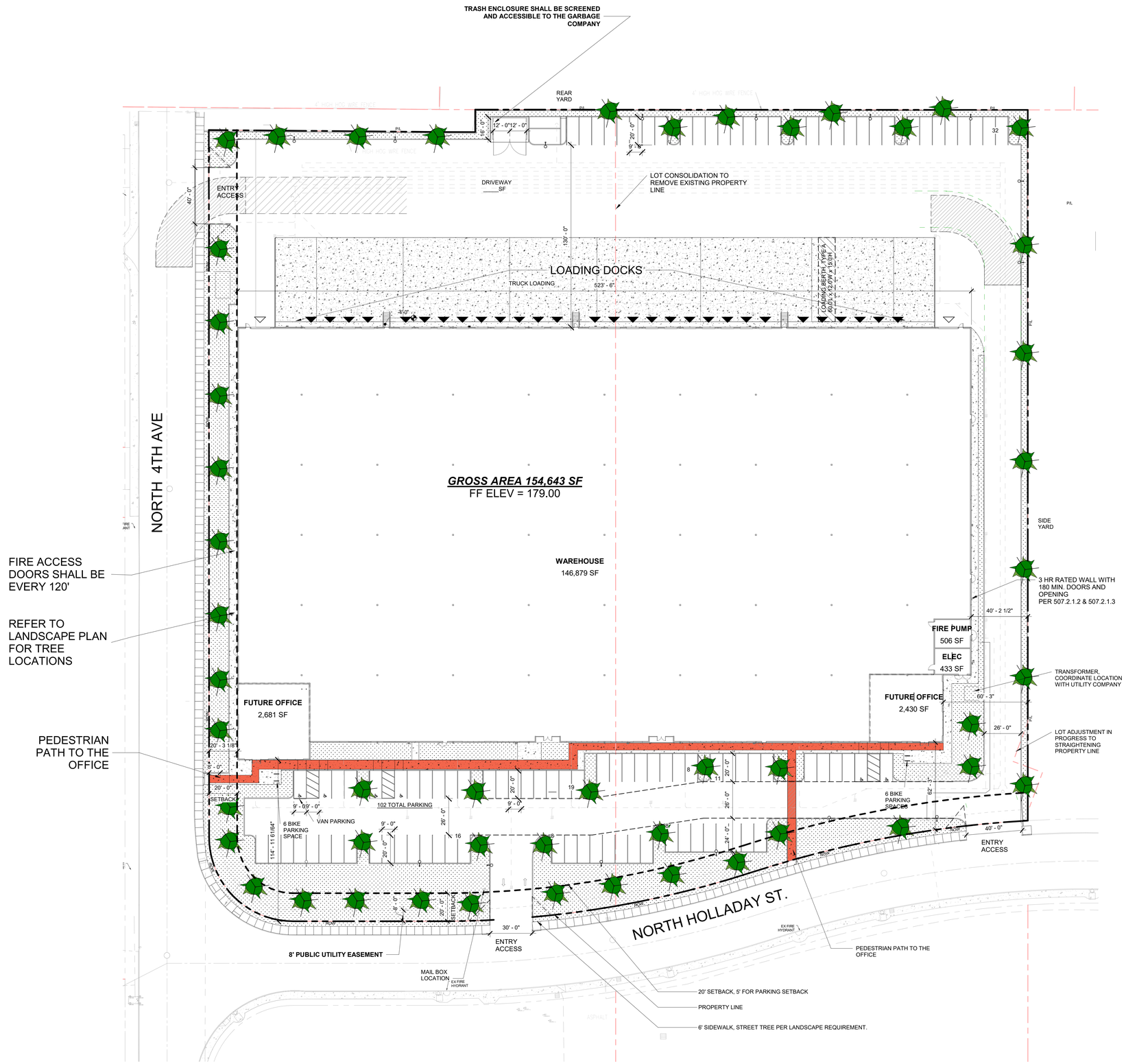

1 SITE PLAN

1" = 30'-0"

GENERAL NOTES - SITE PLAN

1. GENERAL CONTRACTOR SHALL VERIFY ALL DIMENSIONS AND CONDITIONS PRIOR TO CONSTRUCTION. CONFLICTS ARE TO BE BROUGHT TO THE ATTENTION OF THE ARCHITECT PRIOR TO THE START OF CONSTRUCTION RELATED TO SUCH.
2. REFER TO CIVIL DRAWINGS FOR GRADING AND UTILITY INFORMATION.
3. CONTRACTORS SHALL VERIFY ALL LOCATIONS OF EXISTING UTILITIES, CARE SHOULD BE TAKE TO AVOID DAMAGE TO OR DISTURBANCE OF EXISTING UTILITIES.
4. REFER TO CIVIL AND LANDSCAPE DRAWINGS FOR ALL PUBLIC RIGHT-OF-WAY IMPROVEMENTS.
5. THE CONSTRUCTION SHALL NOT RESTRICT A FIVE-FOOT CLEAR UNOBSTRUCTED ACCESS TO ANY WATER OR POWER DISTRIBUTION FACILITIES (POWER POLES, PULL BOXES, TRANSFORMERS, VAULTS, PUMPS, VALVES, METERS, APPURTENANCES, ETC.) OR THE LOCATION OF THE HOOK-UP.
6. THE CONSTRUCTION SHALL NOT BE WITHIN 10' OF ANY POWER LINES - WHETHER OR NOT THE POWER LINES ARE LOCATED ON THE PROPERTY. FAILURE TO COMPLY MAY CAUSE CONSTRUCTION DELAYS OR ADDITIONAL EXPENSES.
7. SITE SIGNAGE UNDER SEPARATE PERMIT.
8. FIRE LANES SHALL BE DESIGNED TO SUPPORT A FIRE APPARATUS LOAD OF 75,000 LBS WITH A WHEEL LOAD OF 12,500 LBS.
9. DELEGATED DESIGN NFPA 13 FIRE SPRINKLER SYSTEM DESIGNED IN ACCORDANCE WITH OSSC 903.3.1.1 WILL BE A DEFERRED SUBMITTAL.
10. FIRE FLOW DEMAND PER OFC APPENDIX B:
    A. PER TABLE B105.2, SECTION 903.3.1.1 DESIGN STANDARD:
       MIN FIRE FLOW = 25% OF VALUE IN TABLE B105.1(2)[a]
       TYPE IIIB, 8,000 SF
       TABLE B105.1(2) FIRE FLOW: 2,000 GPM x 0.25 = 500 GPM
       TABLE B105.2 REDUCED FIRE FLOW RATE = **NOT LESS THAN 1,000 GPM**
       DURATION: **2 HRS**

LEGEND

- DRIVE-IN DOOR
- DOCK-HEIGHT DOOR
- AREA OF WORK
- FIRE LANE
- PARKING COUNT SUBTOTAL
- SLOPE DOWN, UNO
- ACCESSIBLE PEDESTRIAN PATHWAY
- CLEAR VISION ZONES. 15'x15'

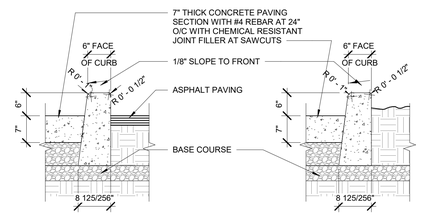

NOTE:

1. CONCRETE TO HAVE A BREAKING STRENGTH OF 3000 PSI AFTER 28 DAYS
2. EXPANSION JOINTS TO BE PROVIDED:
   A. AT EACH POINT OF TANGENCY OF THE CURB
   B. AT EACH COLD JOINT
   C. AT EACH SIDE OF INLET STRUCTURES
   D. AT EACH END OF DRIVEWAYS
   E. AT LOCATIONS NECESSARY TO LIMIT SPACING TO 45 FEET
3. CONTRACTION JOINTS:
   A. SPACING TO BE NOT MORE THAN 15 FEET
   B. THE DEPTH OF THE JOINT SHALL BE AT LEAST 1"
4. BASE ROCK TO BE 2" COMPACTED TO 95% OF AASHTO T-99 AND SHALL BE TO SUBGRADE, STREET STRUCTURE, OR 4" IN DEPTH, WHICHEVER IS GREATER

2 CAST IN PLACE CURB

3/4" = 1'-0"

NORTH

DESIGN REVIEW

MILDREN DESIGN GROUP
ARCHITECTURE | INTERIORS
4875 SW Griffith Drive Suite 300
Beaverton OR, 97005
(503) 244-0552

Client/ Owner:

ALTABIRD INVESTMENTS

Project:

ALTABIRD INVESTMENTS CORNELIUS

TENTH AVENUE INDUSTRIAL CENTER
Lot:13-16, CORNELIUS OR, 97113

Sheet Title:

SITE PLAN

Revisions:

#	Description	Date

MILDREN DESIGN GROUP, P.C., 2022, ALL RIGHTS RESERVED ©

THESE DRAWINGS ARE THE PROPERTY OF MILDREN DESIGN GROUP, P.C., AND ARE NOT TO BE USED OR REPRODUCED IN ANY MANNER, EXCEPT WITH THE PRIOR WRITTEN PERMISSION OF MILDREN DESIGN GROUP, P.C.

Date: 2022-08-10

Drawn by: Author | Checked by: Checker

Job Number: 122013

Sheet

A1.0

C:\Users\mmc\Documents\122013 Cornelius Property_Central 2022_wrgqf3f74ln.rvt

OREGON TRANSPORTATION COMMISSION
Standards for Accessible Parking Places
August 2018

MINIMUM STANDARD SINGLE-ACCESSIBLE PARKING SPACE
(VAN-ACCESSIBLE DESIGNATION REQUIRED)

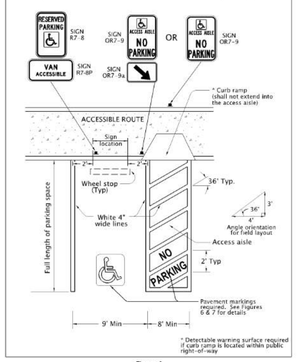

Figure 1

OREGON TRANSPORTATION COMMISSION
Standards for Accessible Parking Places
August 2018

SIGN DESIGN
SIGN NO. R7-8

Sign Background: White, Retroreflective sheeting
Sign Legend: Green, Retroreflective sheeting
Sign Symbol: White on Blue, Retroreflective sheeting

Refer to Standard Highway Signs book for details.

The Disabled Person parking sign is used to designate a parking area reserved for vehicles with DMV permit as stated.

Figure 8

OREGON TRANSPORTATION COMMISSION
Standards for Accessible Parking Places
August 2018

PAVEMENT MARKING LEGEND

Pavement Marking Legend: White or Yellow, Retroreflective

The "No Parking" pavement marking is used to designate an access aisle reserved for persons use parking with a DMV permit. This marking shall be required for all access aisles next to accessible parking spaces. Engineering judgement should be used for placement location to give best visual location to prevent illegal use of access aisle. Yellow may be used instead of white to increase contrast between access aisle white lines and the "No Parking" legend.

Figure 7

OREGON TRANSPORTATION COMMISSION
Standards for Accessible Parking Places
August 2018

SIGN DESIGN
SIGN NO. R7-8P

Sign Background: White, Retroreflective sheeting
Sign Legend: Green, Retroreflective sheeting

Refer to Standard Highway Signs book for details and dimensions.

The VAN-ACCESSIBLE sign shall only be used with sign R7-8 to designate the parking spaces that have an access aisle 8 ft or wider

Figure 9

OREGON TRANSPORTATION COMMISSION
Standards for Accessible Parking Places
August 2018

SIGN DESIGN

SIGN NO. OR7-9

SIGN NO. OR7-9a

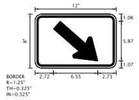

Sign Background: White, Retroreflective sheeting
Sign Legend: Red, Retroreflective sheeting
Sign Symbol: White on Blue, Retroreflective sheeting
Sign OR7-9a: Use when back of walk directly behind access aisle is not available for sign placement and sign must be placed to one side of pedestrian access ramp.

The No Parking in Access Aisle sign is used to designate an access aisle reserved for persons use parking with DMV permit. Install sign in locations where "No Parking" pavement marking may not be visible regularly from snow or sand. Place sign to have direct view from end of access aisle when possible outside of accessible route.

Figure 11

OREGON TRANSPORTATION COMMISSION
Standards for Accessible Parking Places
August 2018

SIGN DESIGN
SIGN NO. OR7-8c

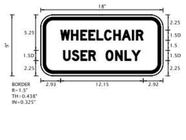

Sign Background: White, Retroreflective sheeting
Sign Legend: Green, Retroreflective sheeting

Refer to ODOT Sign Policy & Guidelines for details and dimensions.

The WHEELCHAIR USER ONLY sign shall only be used with the Disabled Person Parking Sign (R7-8) and the VAN ACCESSIBLE sign (R7-8P) to designate the wheelchair user only spaces as defined in ORS 447.233.

Figure 10

OREGON TRANSPORTATION COMMISSION
Standards for Accessible Parking Places
August 2018

PAVEMENT MARKING STENCIL

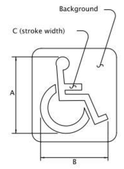

Pavement Marking Background: Optional: Blue, Retroreflective
Pavement Marking Stencil: White, Retroreflective

LEGEND	DIMENSIONS (INCHES)						
	A	B	C	D	E	F	G
MINIMUM	28	24	3				
STANDARD	41	36	4				

The pavement marking stencil shall be used to designate an accessible parking area reserved for vehicles with DMV permits.

Figure 6

1 ODOT PARKING STANDARD
1/2" = 1'-0"

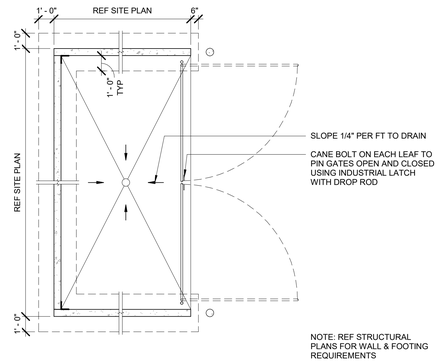

2 TRASH ENCLOSURE
1/4" = 1'-0"

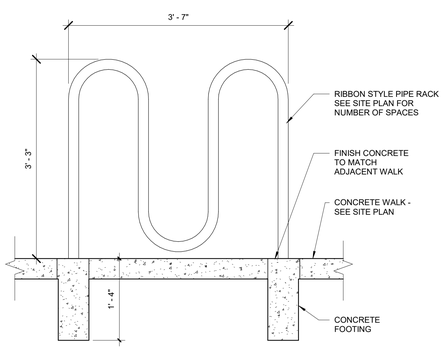

3 BICYCLE RACK
1" = 1'-0"

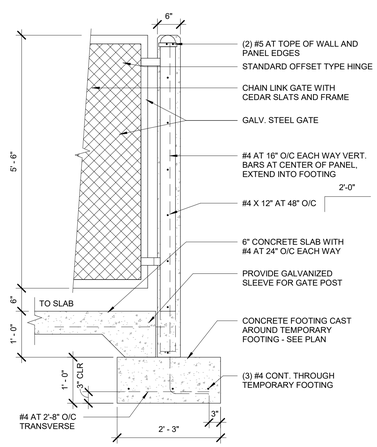

4 GATE AT TRASH ENCLOSURE
3/4" = 1'-0"

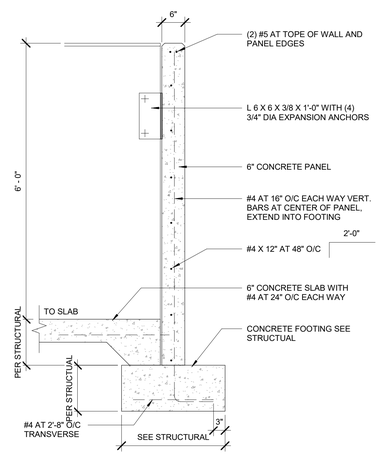

5 TRASH ENCLOSURE WALL
3/4" = 1'-0"

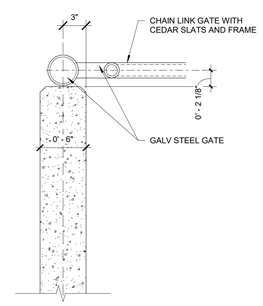

6 TRASH ENCLOSURE GATE JAMB
1 1/2" = 1'-0"

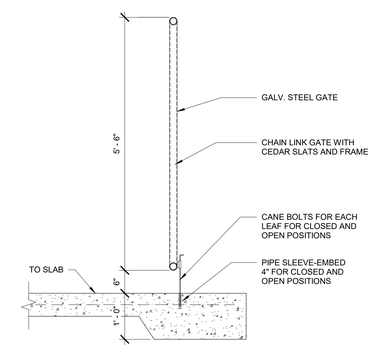

7 TRASH ENCLOSURE GATE SILL
3/4" = 1'-0"

0 10' 20' 40' 80'

DESIGN REVIEW

MILDREN DESIGN GROUP
ARCHITECTURE | INTERIORS
4875 SW Griffith Drive Suite 300
Beaverton OR, 97005
(503) 244-0552

Client/ Owner:
ALTABIRD INVESTMENTS

Project:
ALTABIRD INVESTMENTS CORNELIUS

TENTH AVENUE INDUSTRIAL CENTER
Lot:13-16, CORNELIUS
OR, 97113

Sheet Title:
SITE DETAILS

Revisions:

#	Description	Date

MILDREN DESIGN GROUP, P.C., 2022, ALL RIGHTS RESERVED ©

THESE DRAWINGS ARE THE PROPERTY OF MILDREN DESIGN GROUP, P.C., AND ARE NOT TO BE USED OR REPRODUCED IN ANY MANNER, EXCEPT WITH THE PRIOR WRITTEN PERMISSION OF MILDREN DESIGN GROUP, P.C.

Date: 2022-06-10
Drawn by: Author
Checked by: Checker
Job Number: 122013
Sheet
A1.2

C:\Users\mmc\Documents\122013 Cornelius Property_Central 2022_wrongfil3174.rvt

MILDREN DESIGN GROUP
ARCHITECTURE | INTERIORS
4875 SW Griffith Drive Suite 300
Beaverton OR, 97005
(503) 244-0552

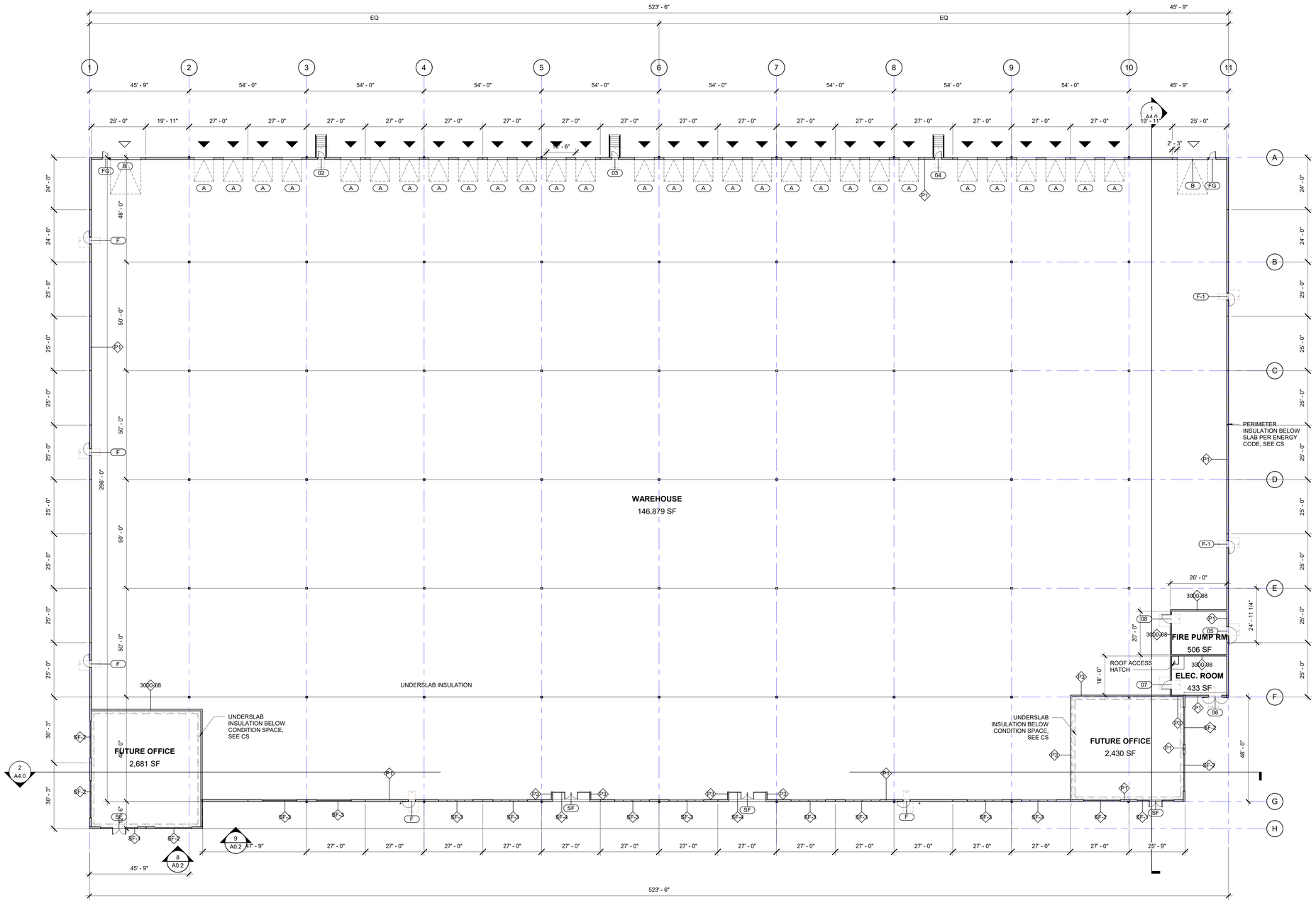

1 LEVEL-1 FLOOR PLAN

1" = 20'-0"

GENERAL NOTES

A. SEE SHEET A1.1 FOR EXTERNAL WALL, INTERIOR WALL AND EXTERIOR HORIZONTAL ASSEMBLIES.
B. INSIDE FINISHED DOOR JAMB FROM WALL AT HINGE SIDE, UNO.
C. INTERIOR DIMENSIONS ARE FROM STUD TO STUD AS SHOWN IN PLAN AND COLUMNS, OR FACE OF FINISH, UNO. EXTERIOR DIMENSIONS ARE FROM FACE OF CONCRETE TO FACE OF CONCRETE UNO.
D. DASHED RECTANGLE INDICATED MINIMUM FIXTURE ACCESS CLEARANCE & ACCESSIBLE DOOR CLEARANCES.
E. ALL MECHANICAL, PLUMBING AND ELECTRICAL PENETRATIONS THROUGH RATED ASSEMBLIES SHALL BE FIRESTOPPED.
F. ALL CROSS SLOPES ALONG ACCESSIBLE ROUTES TO CONFORM TO ACCESSIBILITY REQUIREMENTS (2%) - SEE CIVIL FOR GRADING.
G. CONTRACTOR TO VERIFY CLEARANCE REQUIREMENTS FOR APPLIANCES, PLUMBING FIXTURES, ETC PRIOR TO FRAMING.
H. SEE A0.4 FOR REQUIRED CODE CLEARANCES
I. ALL WORK SHALL BE PERFORMED IN ACCORDANCE WITH ALL APPLICABLE CODES, REGULATIONS AND ORDINANCES HAVING JURISDICTION.
J. SEE STRUCTURAL, MECHANICAL, ELECTRICAL, AND PLUMBING DOCUMENTS FOR ADDITIONAL INFORMATION AND COORDINATION.
K. CONTRACTOR IS RESPONSIBLE FOR EXAMINING ALL CONTRACT DOCUMENTS, FIELD CONDITIONS AND CONFIRMING THAT WORK IS BUILDABLE AS SHOWN BEFORE PROCEEDING WITH CONSTRUCTION. IF THERE ARE ANY QUESTIONS REGARDING THESE OR OTHER COORDINATION QUESTIONS, THE CONTRACTOR IS RESPONSIBLE FOR OBTAIN CLARIFICATIONS BEFORE PROCEEDING WITH WORK IN QUESTION.
L. "TYPICAL" AS USED IN THESE DOCUMENTS SHALL MEAN THAT THE CONDITION IS THE SAME OR REPRESENTATIVE FOR ALL SIMILAR CONDITIONS THROUGHOUT, U.N.O.
M. DO NOT SCALE DRAWINGS. DIMENSIONS GOVERN.
N. SEE ENLARGED PLANS AND ELEVATIONS FOR ADDITIONAL DIMENSIONS NOTES AND DETAIL INDICATIONS.
O. SURFACE MOUNTED FIRE EXTINGUISHERS TYPE 2A-10BC TO BE INSTALLED AT A MAX 75'-0" TRAVEL DISTANCE, PER FIRE EXTINGUISHER AND A MAXIMUM OF +4'-6" A.F.F. TO TOP OF EXTINGUISHER.
P. CONSTRUCT ALL RATED WALLS IN COMPLIANCE WITH U.L. STANDARDS.
Q. FLOORS/ LANDING AT DOORS NOT TO EXCEED 1/2" ELEVATION CHANGE.
R. MAINTAIN MIN 48" CLEAR UNOBSTRUCTED EMERGENCY EXIT AISLE TOWARD DESIGNATED EXIT.
S. SEE FOUNDATION PLAN FOR ALL CONSTRUCTION JOINTS AT CONCRETE SLAB.
T. ALL EXITS TO BE OPERABLE FROM THE INSIDE WITHOUT THE USE OF A KEY OR SPECIAL KNOWLEDGE. MANUALLY OPERATED EDGE OR SURFACE MOUNTED FLUSH BOLTS ARE PROHIBITED ON EXIT DOORS.
U. COORDINATE KNOX BOX LOCATION PER LOCAL CODES.
V. THE BUILDING SHALL BE FULLY SPRINKLERED THROUGHOUT WITH AN APPROVED AUTOMATIC FIRE PROTECTION SYSTEM.

LEGEND

- DOCK-HIGH DOOR
- DRIVE IN DOOR
- VERTICAL LIFT DOOR
- COILING DOOR
- FE — FIRE EXTINGUISHER, WALL MOUNTED

NORTH

0 10' 20' 40' 80'

DESIGN REVIEW

Client/ Owner:

ALTABIRD INVESTMENTS

Project:

ALTABIRD INVESTMENTS CORNELIUS

TENTH AVENUE INDUSTRIAL CENTER
Lot:13-16, CORNELIUS
OR, 97113

Sheet Title:

FLOOR PLAN

Revisions:

#	Description	Date

MILDREN DESIGN GROUP, P.C., 2022, ALL RIGHTS RESERVED ©

THESE DRAWINGS ARE THE PROPERTY OF MILDREN DESIGN GROUP, P.C., AND ARE NOT TO BE USED OR REPRODUCED IN ANY MANNER, EXCEPT WITH THE PRIOR WRITTEN PERMISSION OF MILDREN DESIGN GROUP, P.C.

Date:	2022-08-10
Drawn by:	Checked by:
Author	Checker
Job Number:	122013
Sheet	A2.0

C:\Users\mmm\Documents\122013 Cornelius Property_Central 2022_wpg4ETFM.rvt

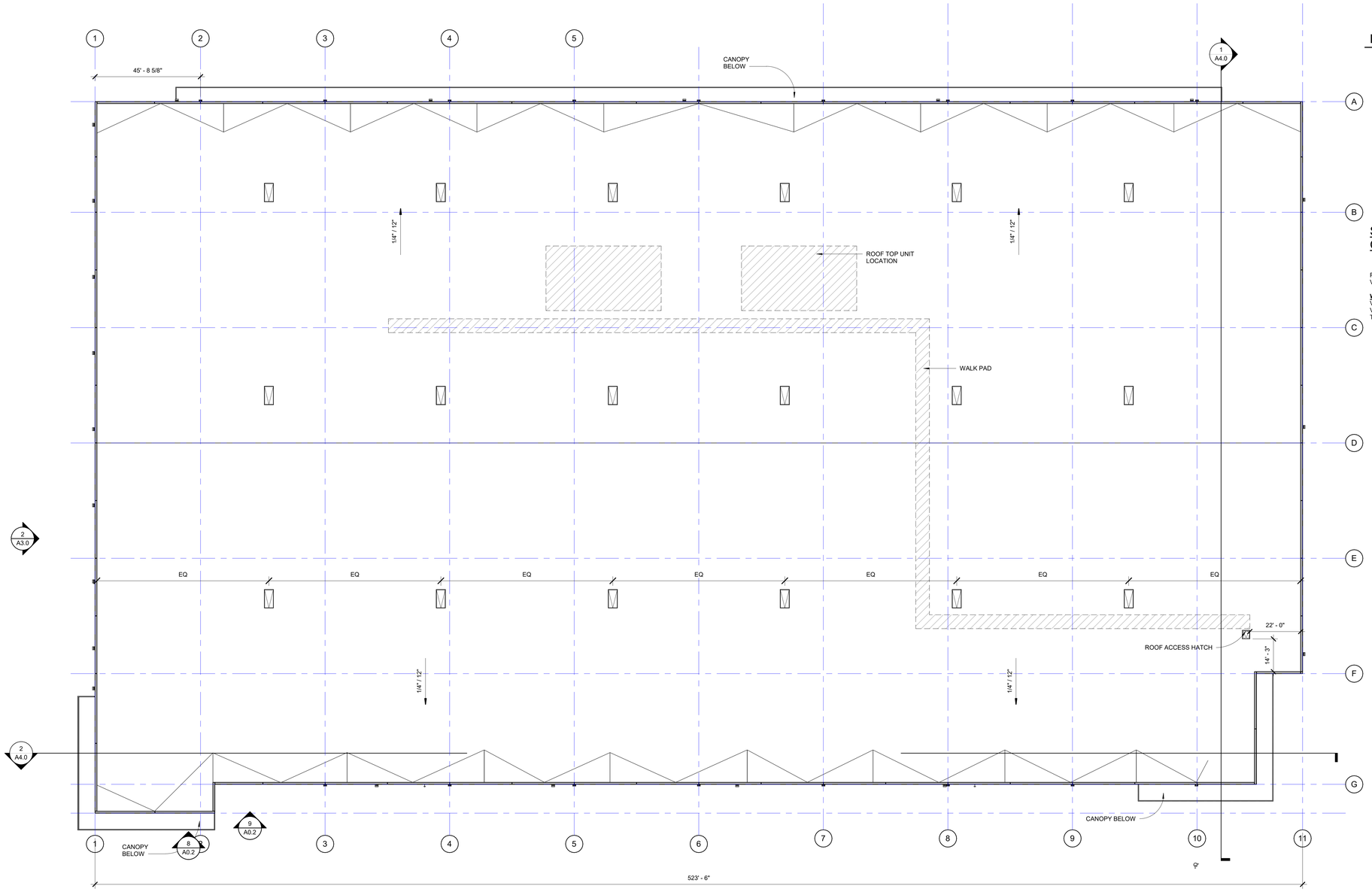

1 ROOF PLAN

1" = 20'-0"

LEGEND

SMOKE AND HEAT VENT

MFR: KINGSPAN OR SIM.
PRODUCT #: TUFFLITE POLYCARBONATE
ALUMINUM "ECO" DOUBLE LID SELF FLASHING
SMOKE VENT. 4' X8'
OUTER DOME: CLEAR
MIDDLE DOME: WHITE
INNER DOME: CLEAR
FUSIBLE LINK:360'

NOTE:

PROVIDE ROOF PADS FOR MECHANICAL MAINTENANCE

SMOKE AND HEAT VENT AREA CALCULATION

PER 910.3.3 FOR SPRINKLER STORAGE AREA
VENT AREA = VOLUME OF AREA /9000

WAREHOUSE
VENT AREA REQUIRED ((148,000 SF X 30')/ 9000))= 493.33 SF (REQUIRED)
VENT SIZES= 4'X8'= 32 SF
TOTAL # VENT REQUIRED= 493.33/32 = 15.42 VENTS (REQUIRED) (18 PROVIDED)

0 10' 20' 40' 80'

DESIGN REVIEW

MILDREN DESIGN GROUP
ARCHITECTURE | INTERIORS
4875 SW Griffith Drive Suite 300
Beaverton OR, 97005
(503) 244-0552

Client/ Owner:

ALTABIRD INVESTMENTS

Project:

ALTABIRD INVESTMENTS CORNELIUS

TENTH AVENUE INDUSTRIAL CENTER
Lot:13-16, CORNELIUS
OR, 97113

Sheet Title:

ROOF PLAN

Revisions:

#	Description	Date

MILDREN DESIGN GROUP, P.C., 2022, ALL RIGHTS RESERVED ©

THESE DRAWINGS ARE THE PROPERTY OF MILDREN DESIGN GROUP, P.C., AND ARE NOT TO BE USED OR REPRODUCED IN ANY MANNER, EXCEPT WITH THE PRIOR WRITTEN PERMISSION OF MILDREN DESIGN GROUP, P.C.

Date: 2022-08-10
Drawn by: Author
Checked by: Checker
Job Number: 122013
Sheet

A2.6

C:\Users\mmc\Documents\122013 Cornelius Property_Central 2022_revg5EFFA.rvt

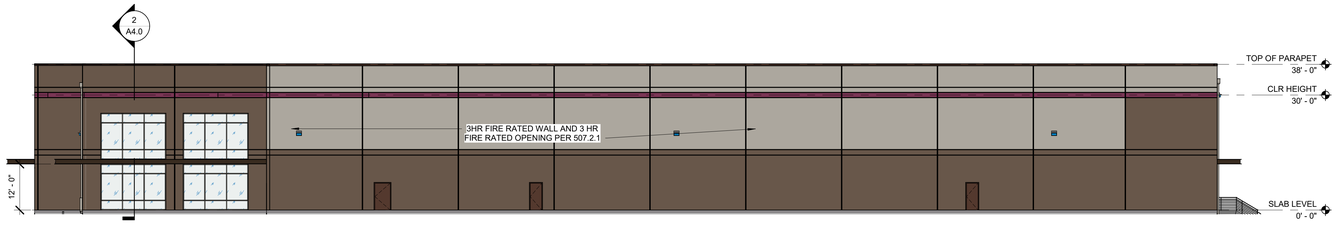

1 ELEVATION_EAST
1/16" = 1'-0"

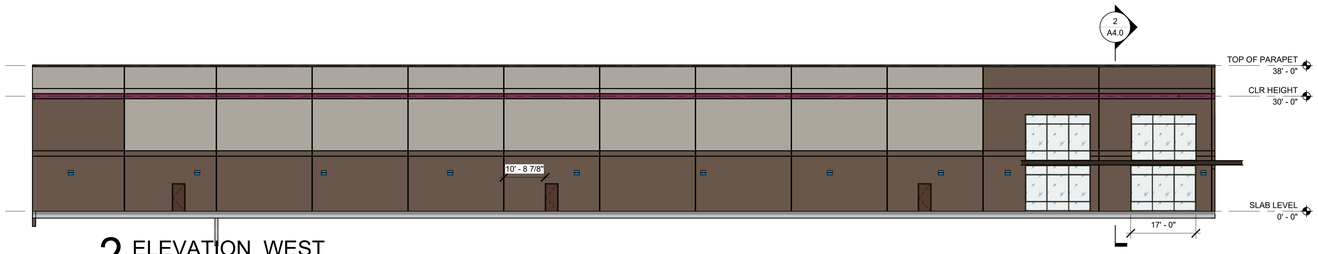

2 ELEVATION_WEST
1/16" = 1'-0"

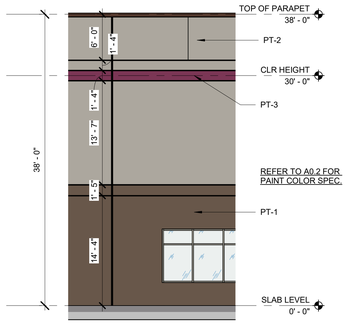

5 ELEVATION _SOUTH - Callout 1
1/8" = 1'-0"

MATERIALS SCHEDULE

ROOF

R-1
MATERIAL: SINGLE PLY ROOFING
MFR: DURO-LAST

WALL

PT-1 (BASE COLOR, HM DOOR COLOR FLASHING)
MATERIAL: TILT-UP CONCRETE WALL
MFR: SHERWIN-WILLIAMS
COLOR: SW 7510 CHATEAU BROWN

PT-2 (MAIN BODY COLOR)
MATERIAL: TILT-UP CONCRETE WALL
MFR: SHERWIN-WILLIAMS
COLOR: SW 7017 DORIAN GRAY

PT-3 (ACCENT COLOR)
MATERIAL: TILT-UP CONCRETE WALL
MFR: SHERWIN-WILLIAMS
COLOR: SW 6566 FRAMBOISE

CANOPY, STOREFRONT FRAME, PARAPET CAP, AND FLASHING

MTL-1
MATERIAL: METAL
FINISH: ANODIZED FINISH
COLOR: DARK BRONZE

STOREFRONT COLOR
MFR: SEE SPEC.
FINISH: CLEAR ANODIZED FINISH #14.

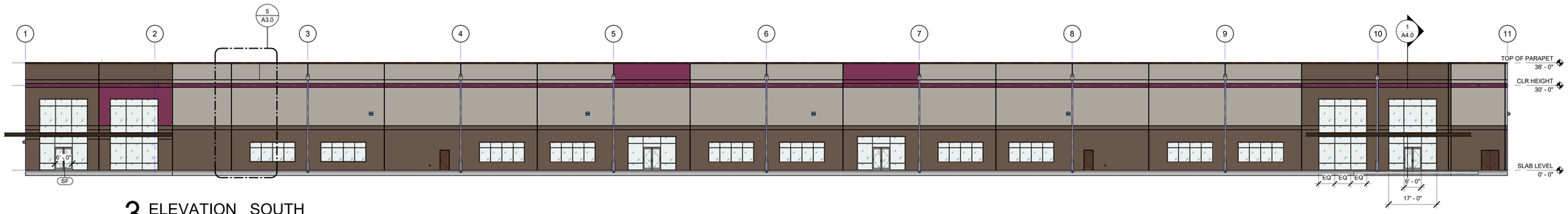

3 ELEVATION _SOUTH
NTS | A3.0

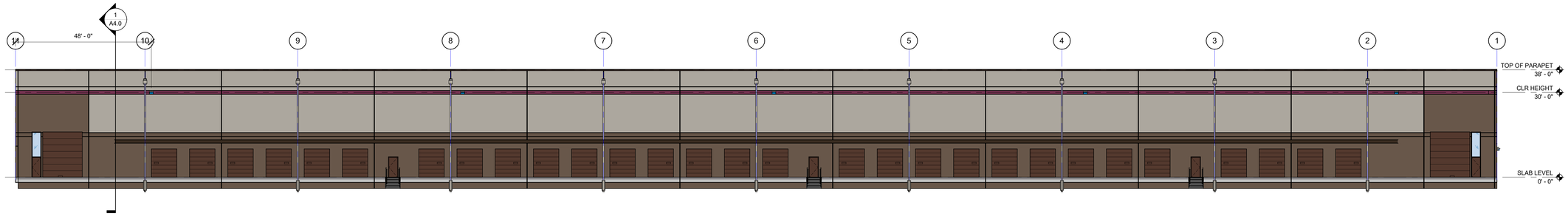

4 ELEVATION_NORTH
1/16" = 1'-0"

0 10' 20' 40' 80'

DESIGN REVIEW

MILDREN
DESIGN
GROUP
ARCHITECTURE | INTERIORS
4875 SW Griffith Drive Suite 300
Beaverton OR, 97005
(503) 244-0552

Client/ Owner:

ALTABIRD INVESTMENTS

Project:

ALTABIRD INVESTMENTS CORNELIUS

TENTH AVENUE INDUSTRIAL CENTER
Lot:13-16, CORNELIUS
OR, 97113

Sheet Title:

ELEVATIONS

Revisions:

#	Description	Date

MILDREN DESIGN GROUP, P.C., 2022, ALL RIGHTS RESERVED ©

THESE DRAWINGS ARE THE PROPERTY OF MILDREN DESIGN GROUP, P.C., AND ARE NOT TO BE USED OR REPRODUCED IN ANY MANNER, EXCEPT WITH THE PRIOR WRITTEN PERMISSION OF MILDREN DESIGN GROUP, P.C.

Date: 2022-08-10
Drawn by: Author
Checked by: Checker
Job Number: 122013
Sheet

A3.0

C:\Users\nicon\Documents\122013 Cornelius Property_Central 2022_nicgrg3EXFfkt.rvt

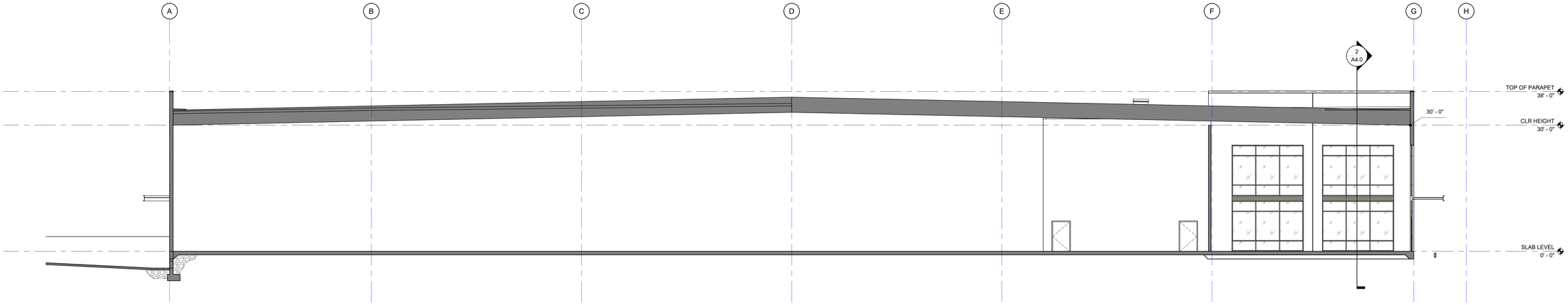

1 SECTION 1
1" = 10'-0"

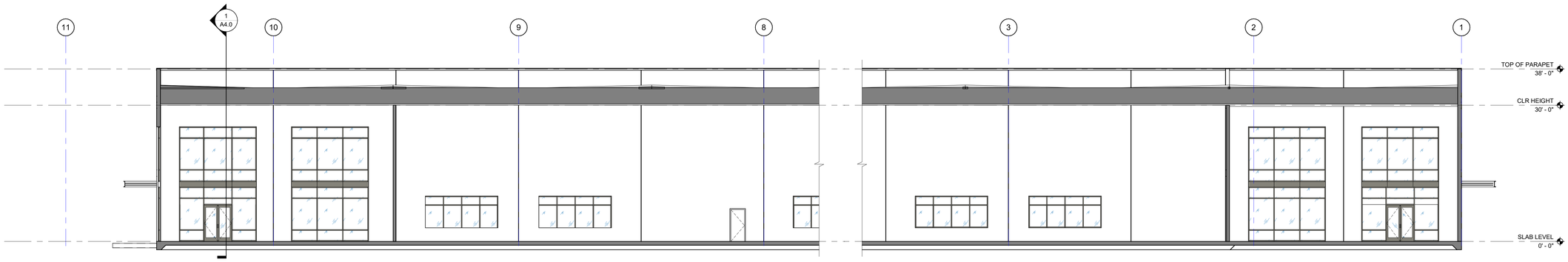

2 SECTION 2
1" = 10'-0"

MILDREN DESIGN GROUP
ARCHITECTURE | INTERIORS
4875 SW Griffith Drive Suite 300
Beaverton OR, 97005
(503) 244-0552

Client/ Owner:

ALTABIRD INVESTMENTS

Project:

ALTABIRD INVESTMENTS CORNELIUS

TENTH AVENUE INDUSTRIAL CENTER
Lot:13-16, CORNELIUS
OR, 97113

Sheet Title:

BUILDING SECTION

Revisions:

#	Description	Date

MILDREN DESIGN GROUP, P.C., 2022, ALL RIGHTS RESERVED ©

THESE DRAWINGS ARE THE PROPERTY OF MILDREN DESIGN GROUP, P.C., AND ARE NOT TO BE USED OR REPRODUCED IN ANY MANNER, EXCEPT WITH THE PRIOR WRITTEN PERMISSION OF MILDREN DESIGN GROUP, P.C.

Date: 2022-08-10
Drawn by: Author
Checked by: Checker
Job Number: 122013
Sheet

DESIGN REVIEW

A4.0

C:\Users\mmr\Documents\122013 Cornelius Property_Central 2020_mrgpl2018.rvt

THE GARBAGE COMPANY

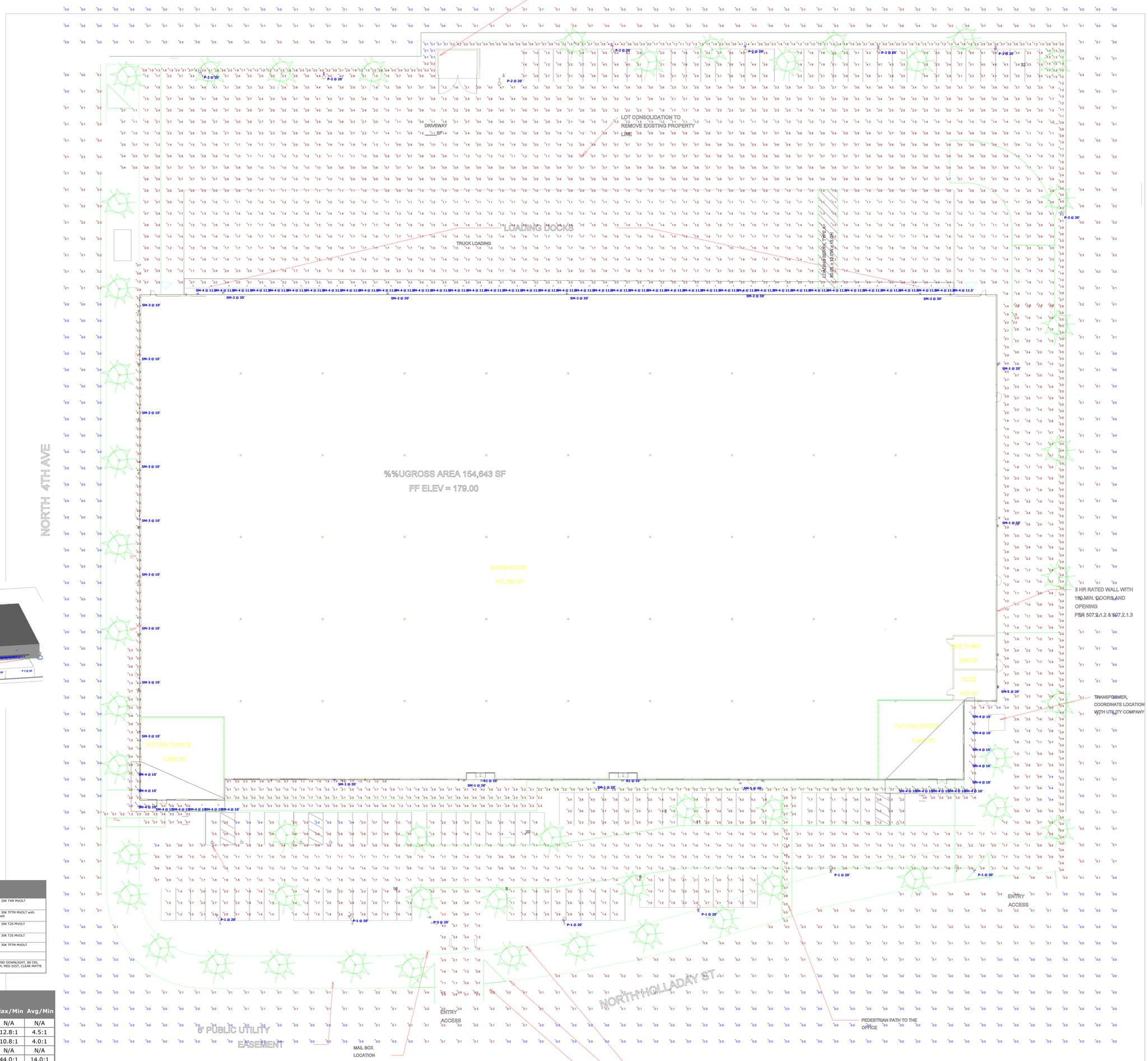

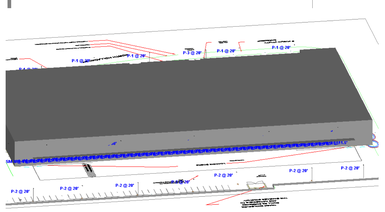

View #1

Schedule					
Symbol	Label	Quantity	Manufacturer	Catalog Number	Description
	P-1	6	Lithonia Lighting	DSX0 LED P4 30K T4M MVOLT	DSX0 LED P4 30K T4M MVOLT
	P-2	7	Lithonia Lighting	DSX1 LED P6 30K TFTM MVOLT HS	DSX1 LED P6 30K TFTM MVOLT with houseside shield
	P-3	2	Lithonia Lighting	DSX0 LED P4 30K T2S MVOLT	DSX0 LED P4 30K T2S MVOLT
	SM-1	7	Lithonia Lighting	DSX0 LED P4 30K T2S MVOLT	DSX0 LED P4 30K T2S MVOLT
	SM-2	5	Lithonia Lighting	DSX1 LED P6 30K TFTM MVOLT	DSX1 LED P6 30K TFTM MVOLT
	SM-3	9	BEGA	24 218 K3	24 218 K3
	R1	2	Gotham Architectural Lighting	EVO4 30/07 AR HD LD	EVO 4IN ROUND DOWNLIGHT, 80 CRI, 3000K, 750LM, MED DIST, CLEAR MATTE DIFFUSE

Statistics

Description	Symbol	Avg	Max	Min	Max/Min	Avg/Min
Light Spill	+	0.1 fc	0.9 fc	0.0 fc	N/A	N/A
Parking Lot	+	1.8 fc	5.1 fc	0.4 fc	12.8:1	4.5:1
Parking Lot	+	1.6 fc	4.3 fc	0.4 fc	10.8:1	4.0:1
Ped Pathway	+	2.3 fc	6.9 fc	0.0 fc	N/A	N/A
Back Ped Path	+	1.4 fc	4.4 fc	0.1 fc	44.0:1	14.0:1

HL STEARNS

Designer
R. Kenagy
Date
05/10/2022
Drawing No.

Summary

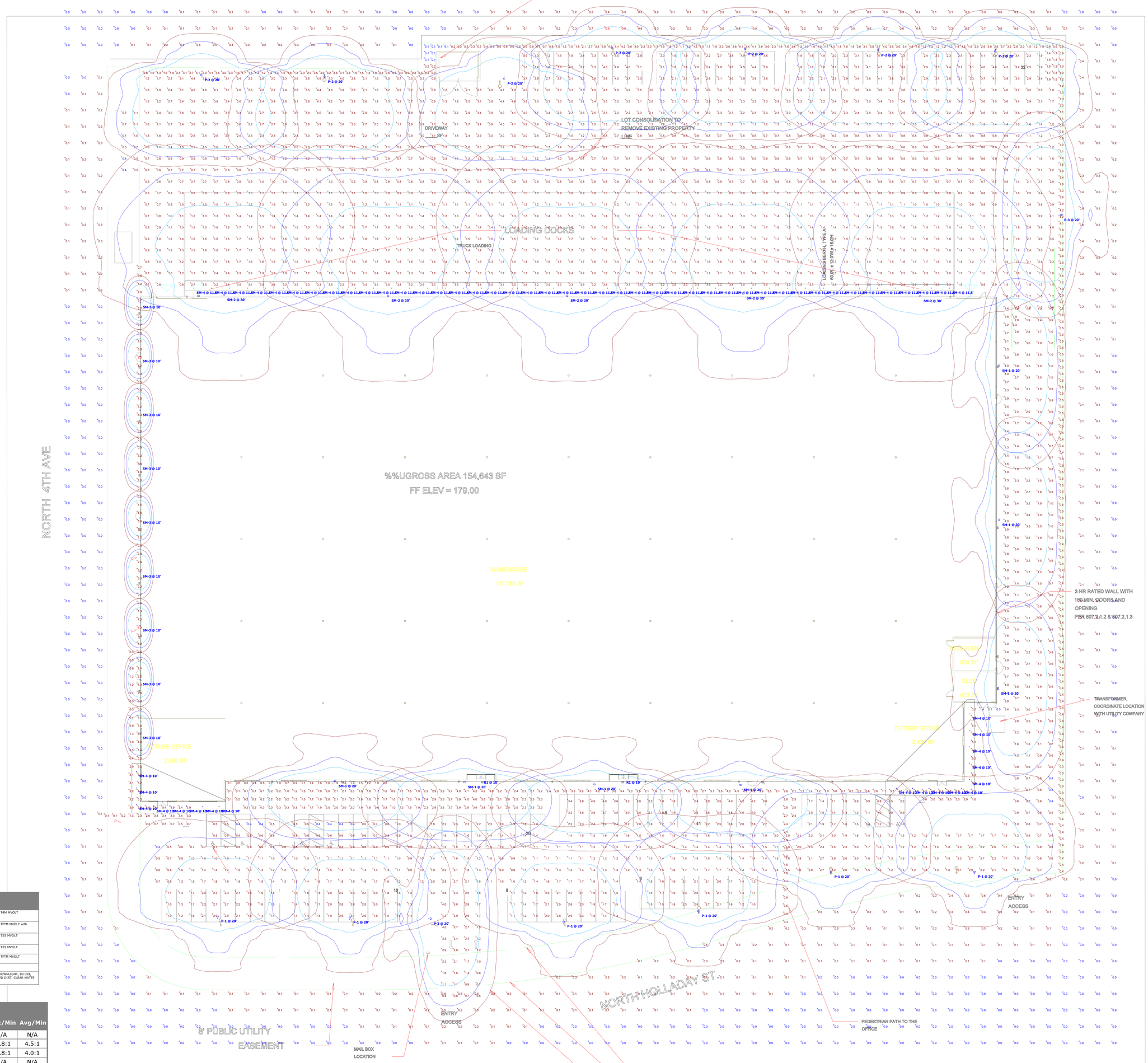

Schedule					
Symbol	Label	Quantity	Manufacturer	Catalog Number	Description
	P-1	6	Lithonia Lighting	DSX0 LED P4 30K T4M MVOLT	DSX0 LED P4 30K T4M MVOLT
	P-2	7	Lithonia Lighting	DSX1 LED P6 30K TFTM MVOLT HS	DSX1 LED P6 30K TFTM MVOLT with houseside shield
	P-3	2	Lithonia Lighting	DSX0 LED P4 30K T2S MVOLT	DSX0 LED P4 30K T2S MVOLT
	SM-1	7	Lithonia Lighting	DSX0 LED P4 30K T2S MVOLT	DSX0 LED P4 30K T2S MVOLT
	SM-2	5	Lithonia Lighting	DSX1 LED P6 30K TFTM MVOLT	DSX1 LED P6 30K TFTM MVOLT
	SM-3	9	BEGA	24 218 K3	24 218 K3
	R1	2	Gotham Architectural Lighting	EVO4 30/07 AR HD LD	EVO 4IN ROUND DOWNLIGHT, 80 CRI, 3000K, 750LM, MED DIST, CLEAR MATTE DIFFUSE

Statistics

Description	Symbol	Avg	Max	Min	Max/Min	Avg/Min
Light Spill	+	0.1 fc	0.9 fc	0.0 fc	N/A	N/A
Parking Lot	+	1.8 fc	5.1 fc	0.4 fc	12.8:1	4.5:1
Parking Lot	+	1.6 fc	4.3 fc	0.4 fc	10.8:1	4.0:1
Ped Pathway	+	2.3 fc	6.9 fc	0.0 fc	N/A	N/A
Back Ped Path	+	1.4 fc	4.4 fc	0.1 fc	44.0:1	14.0:1

HL STEARNS

Designer
R. Kenagy
Date
05/10/2022
Drawing No.

Summary